SFM SERIES
FLAIL MULCHER

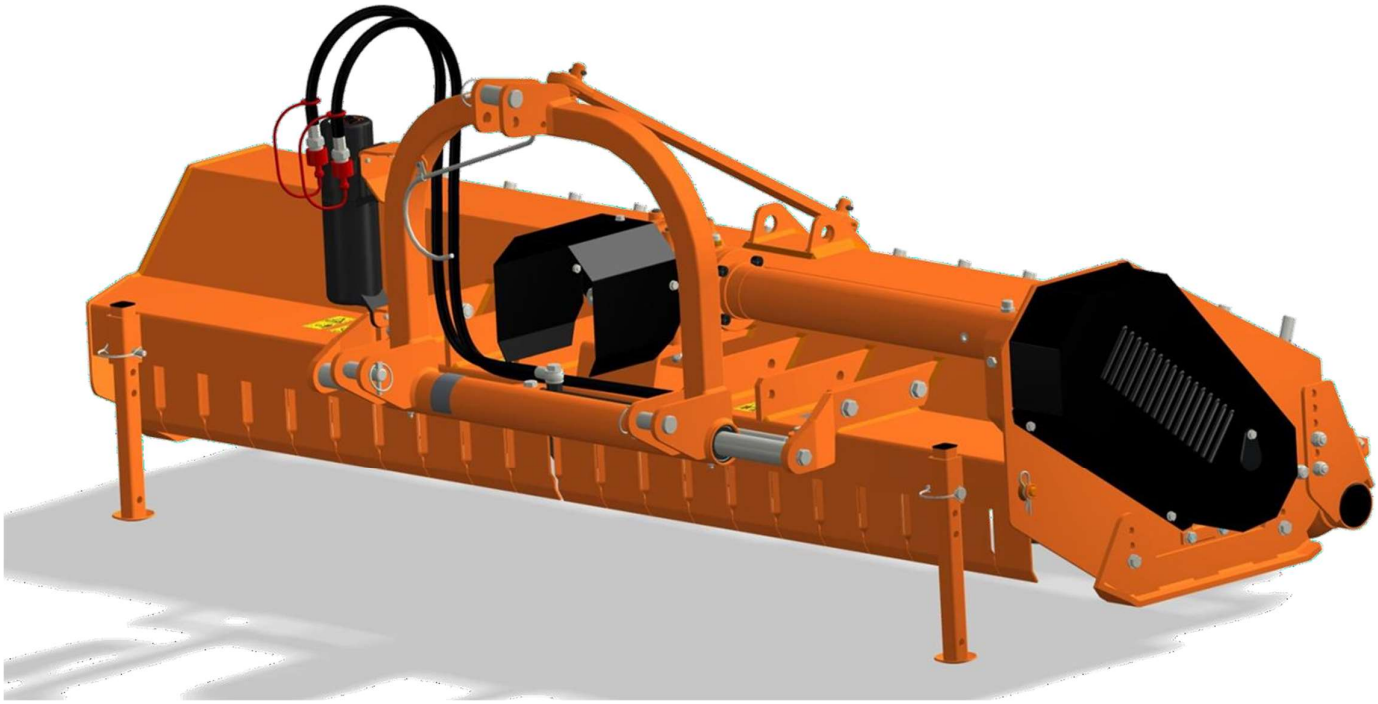

OPERATOR'S MANUAL

Tirth Agro Technology.

ISO 9001:2015 & CE Certified Company

OM2211-21EN-003_JUL_19

Congratulation for purchasing your new COSMO BULLY mulcher!

This machine has been designed and manufactured following all safety and quality requirements needed for a safe and satisfactory use over time.
A careful reading of this manual will permit you to familiarize with your new equipment and will provide you all the tools needed to use it safely.
A proper maintenance and knowledge of the safety rules of use will allow obtaining the best performance and a long service life of the machine.

The Safety Alert Symbol used throughout this manual and on safety decals of the machine indicates the presence of potential hazard to the operator. When you see this symbol, be alert and carefully read the message that follows it.

The Safety Alert Symbol is used in conjunction with following Signal Words, according to the degree of possible injuries that may result operating the implement:

DANGER
Indicates an imminently hazardous situation that, if not avoided, will result in death or serious injury.

WARNING
Indicates a potentially hazardous situation that, if not avoided, could result in death or serious injury, and includes hazards that are exposed when guards are removed. It may also be used to alert against unsafe practices.

CAUTION
Indicates a potentially hazardous situation that, if not avoided, may result in minor or moderate injury. It may also be used to alert against unsafe practices.

IMPORTANT
Indicates instructions or procedures that, if not observed, can cause damage to equipment or environment.

NOTE
Indicates helpful information.

READ, UNDERSTAND, and FOLLOW the safety messages following the Safety Alert Symbol and Signal Words. Failure to comply with safety messages could result in serious bodily injury or death.

TO THE PURCHASER

This manual contains valuable information about SFM-SERIES Mulcher. It has been carefully prepared to give you helpful suggestions for operating, adjusting, servicing repair parts.

Keep this manual in a convenient place for quick and easy reference. Study it carefully. You have purchased a dependable and sturdy Mulcher, but only by proper care and operation can you expect to get the service and long life designed and built into it.

RIGHT-HAND AND LEFT-HAND sides are determined by watching from the tractor side.

Sometime in the future your Mulcher may need new parts to replace those are worn or broken. If so, go to nearest COSMO BULLY dealer and provide him the model and part number.

Customer information

Name_____

Purchased from_____

Purchased date_____

Model No._____

Serial No._____

TABLE OF CONTENTS

1. ABOUT THIS MANUAL 6
2. INTRODUCTION 6
2.1. MACHINE IDENTIFICATION 6
2.2. INTENDED USE 7
2.3. MAIN PARTS DESCRIPTION 8
2.4. CONFIGURATION 9
2.5. TECHNICAL SPECIFICATION 10
3. SAFETY 11
3.1. GENERAL SAFETY INSTRUCTIONS 11
3.2. EQUIPMENTSAFETY INSTRUCTIONS 12
3.3. OPERATING SAFETY INSTRUCTIONS 13
3.4. TRANSPORTING SAFETY INSTRUCTIONS 14
3.5. MAINTENANCE SAFETY INSTRUCTIONS 15
3.6. STORAGE SAFETY INSTRUCTIONS 16
3.7. SAFETY LABELS 16
4. SET UP 20
4.1. CONNECTING TO THE TRACTOR 20
4.2. DRIVELINE INSTALLATION 21
4.3. TRACTOR-MULCHER STABILITY 22
5. OPERATING 23
5.1. START-UP 23
5.2. OPERATING INSTRUCTIONS 24
5.3. ADJUSTMENTS 26
5.4. STOPPING AND DISCONNECTION 33
5.5. TRASPORTATION 33
6. MAINTENANCE 34
6.1. ROTOR TOOLS REPLACEMENT 34
6.2. GEARBOX LUBRICATION 36
6.3. ROTOR BEARINGS LUBRICATION 37
6.4. ROLLERBEARINGS LUBRICATION 37
6.5. WHEELS BRACKETS LUBRICATIONS 38
6.6. 3-POINT HITCH LUBRICATION 38
6.7. DRIVE BELTS REPLACEMENT 39
6.8. DRIVESHAFT MAINTENANCE 39
7. STORAGE 39
8. SCRAPING 39
9. TROUBLESHOOTING 40
10.TORQUE VALUES TABLE 41
11.WARRANTY 41
12. SPARE PARTS
13. “EC” DECLARATION OF CONFORMITY

1. ABOUT THIS MANUAL

The operator must read the manual for a correct understanding of the hazards that may present when operating the mulcher , as well as for obtain optimum performance from the machine.
The manual is part of the machine, it must be kept in good condition and remain with the machine even in case of resale, until its demolition. In case of loss or damage, request a new copy to the Manufacturer or your Dealer.
The information, descriptions and illustrations in this manual describe the state of the product at the time of its publication and may not reflect the product in the future.
The Manufacturer reserve the right to make design improvements or changes in specifications without incurring in any obligation to install them on units previously sold.
Text, illustrations and drawings of this manual cannot be disclosed or transmitted, in whole or in part, to third parties without the written permission of the Manufacturer. All rights are reserved.

2. INTRODUCTION

2.1. MACHINE IDENTIFICATION

Each Mulcher is provided with a plate for unique identification (see position in picture below), showing the CEmarking together with following information:

- Manufacturer name and address
- Type of machine (“TYPE”)
- Model of machine (“MODEL”)
- Serial number (“SERIAL No.”)
- Construction year (“YEAR”)
- Machine weight (“MASS”)

It’s recommended to note down all data shown on the plate.
Any request for assistance or information regarding the machine must be directed to the Manufacturer or Dealer always referring to the model and serial number as shown on the plate affixed to the machine.

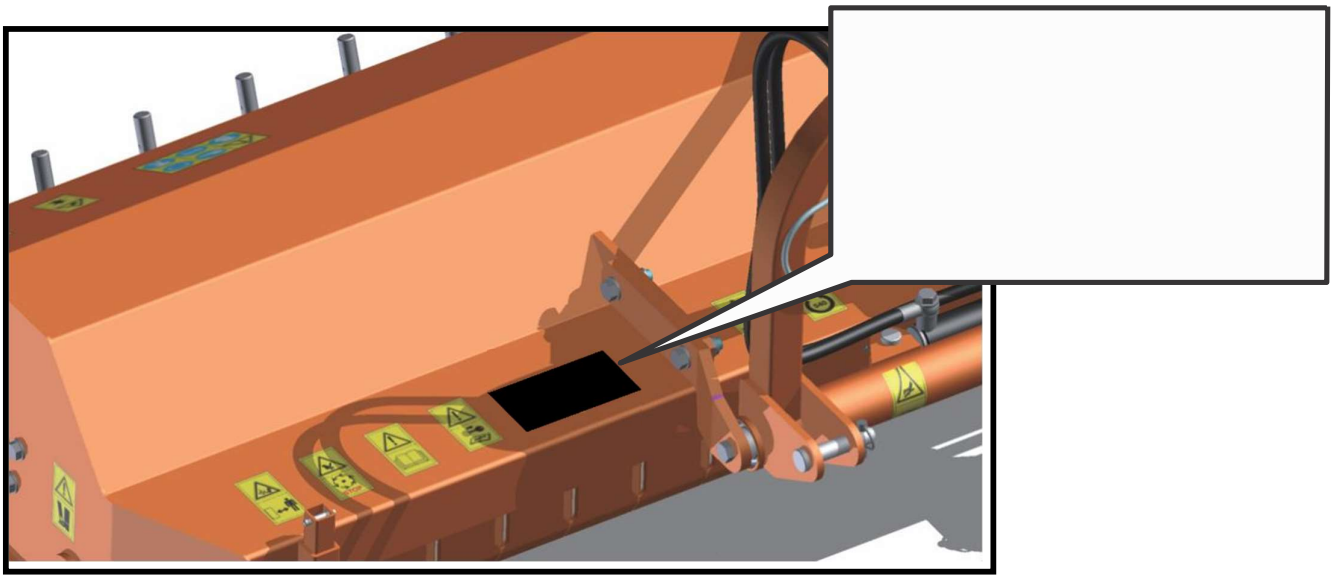

2.2. INTENDED USE

The SFM Mulcher is designed specifically for cutting grass and for shredding fibrous and wood stalks, corn and branches up to a diameter of 5 cm, depending on the type of tool used.
The mulcher s are designed to be mounted on tractors equipped with hydraulic lift and universal three-point hitch that can support the implement weight and driven by the power of the tractor through the PTO driveshaft.
The tractors used to operate the SFM Mulcher must have the following requirements:

Hitch Category:	3-point hitch, I / II Category standard
PTO:	540 RPM, 6-spline, 1 3/8 Z6
Horsepower:	30-70 HP

DANGER

Any use of the machine other than the intended use is non-intended use and is to be considered as unauthorized and dangerous. The manufacturer assumes no liability for damage resulting from non-intended use.

2.3. MAIN PARTS DESCRIPTION

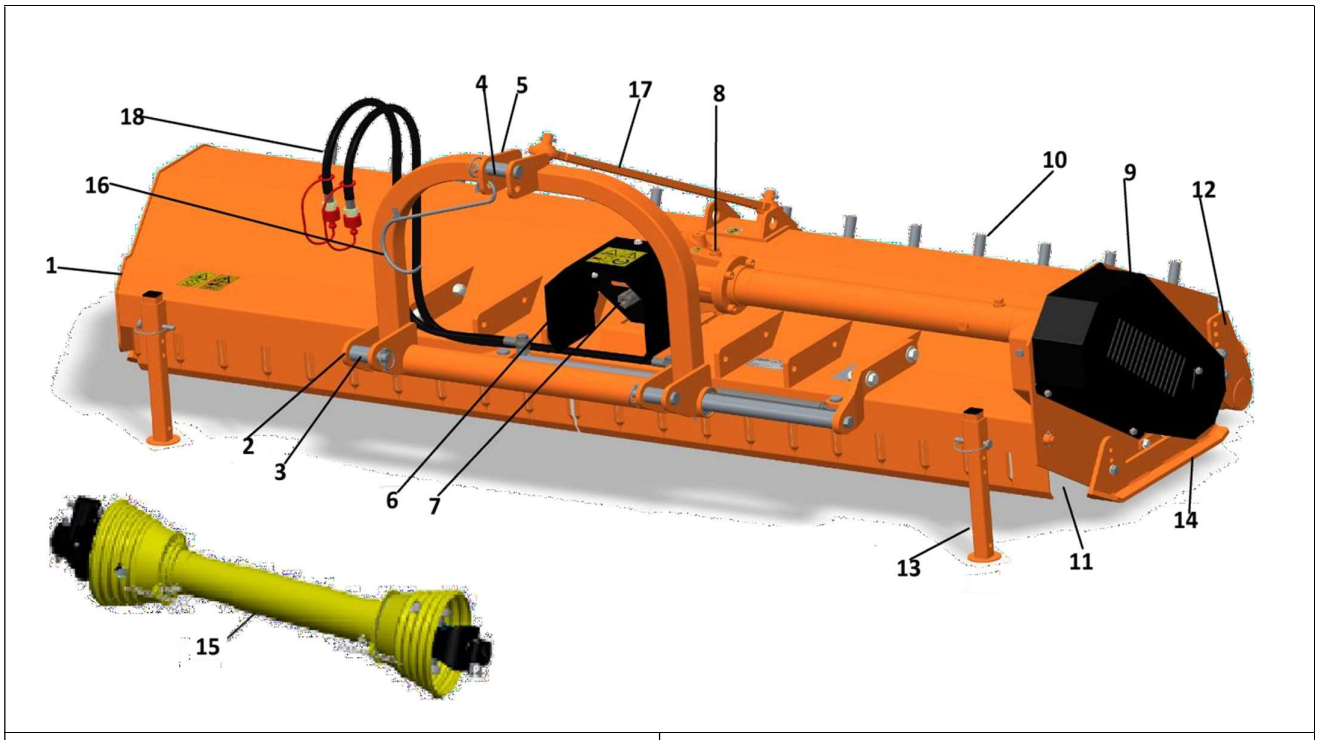

1. Mulcher frame	10. Racks
2. Lower hitch	11. Shredding room
3. Lower hitch pin	12. Roller
4. Upper hitch pin	13. Parking stand
5. Upper hitch	14. Side skid
6. PTO shield	15. Cardan driveshaft
7. Implement Input Connection	16. Driveshaft support
8. Gearbox with free wheel inside	17. Tie-rod
9. Side transmission case	18. Hydraulic hoses

NOTE
To make the illustrations clear, some images of this manual may refer to machines with some components (e.g. safety devices and barriers) removed.

2.4. CONFIGURATIONS

The SFM-M Mulcher has a bolt-on tower. The SFM-H has a hydraulically shifting tower. Both the SFM-M and SFM-H come standard with rear roller, hammers and rear cover with rakes.

STANDARD CONFIGURATION	
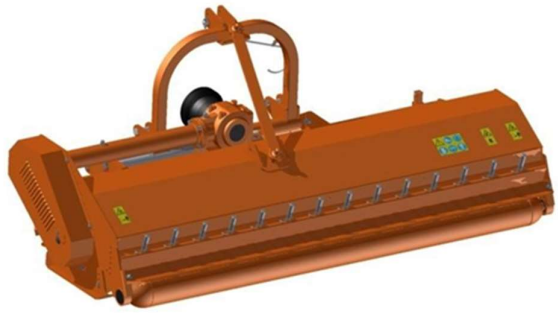	

2.5. TECHNICAL SPECIFICATIONS

Model							
		130	**145**	**160**	**175**	**205**	**220**
Overall dimensions	mm	1450x850x1130	1620x850x1130	1770x850x1130	1920x850x1130	2220x850x1130	2370x850x1130
Working width	mm	1300	1450	1600	1750	2050	2200
	Inches	51	57”	63”	69”	80”	87’’
Recommended tractor hp	Hp / Kw	30-60 / 22-44	30-60 / 22-44	30-60 / 22-44	30-60 / 22-44	30-60 / 22-44	30-60 / 22-44
3-point hitch type	-	Cat. I/II	Cat. I/II	Cat. I/II	Cat. I/II	Cat. I/II	Cat. I/II
Number of blades	No.	32	36	40	44	52	56
Number of hammers	No.	16	18	20	22	26	28
PTO input speed	rpm	540	540	540	540	540	540
Rotor speed	rpm	2083	2083	2083	2083	2083	2083
Side transmission	-	3 belts	4 belts	4 belts	4 belts	4 belts	4 belts
		BX type	BX type	BX type	BX type	BX type	BX type
Side shift (max)	mm	300	300 / 11.81	300 / 11.81	300 / 11.81	300 / 11.81	300 / 11.81
Rotor diameter	Inches	6.25’’	6.25’’	6.25’’	6.25’’	6.25’’	6.25’’
	mm	159	159	159	159	159	159
Rotor swing diameter	mm	378	378	378	378	378	378
Approx. Weight (driveline not included)	Kg	366 / 807	388 / 855	412 / 908	434 / 957	482 / 1063	506 / 1116
Cutting height	mm	Four (4) positions. Heights of 32, 57, 82 and 107mm					

3. SAFETY

Proper use of the equipment, a strict observance of the safety messages listed below and application of all reasonable practices to avoid any risks prevents accidents or injury, allows the machine working better and longer, and minimizes the failures.
The manufacturer assumes no liability for any damage resulting from not applying the behavioral rules indicated into the manual.

3.1. GENERAL SAFETY INSTRUCTION

DANGER
The machine must be used only by authorized and trained operators. The operator must have read and understood the instructions of this manual, it must make adequate preparation for the proper use of the machine and must hold a driving license. In case of doubt about the use of the machine and/or the interpretation of this manual, the operator must contact the Manufacturer or the Dealer.

WARNING
The manual must always remain with the machine. In case of loss or damage, request a new copy to the Manufacturer or your Dealer.

WARNING
Follow strictly the rules prescribed by the safety pictograms applied to the machine.

WARNING
Be sure that all safety pictograms are legible. If pictograms are worn, they must be replaced with others obtained from the Manufacturer and placed in the position indicated by this manual.

DANGER
Before using the machine, make sure that all safety devices are installed and in good working conditions. In case of damages of shields, replace them immediately.

DANGER
Is absolutely forbidden to remove or alter safety devices.

DANGER
Before starting, and during operation of the mulcher, make sure there are no people or animals in the operation area: the machine can project material from the back, with risks of serious injury or death.

DANGER
Pay maximum attention to avoid any accidental contact with rotating parts of the machine.

DANGER
During operation, adjustment, maintenance, repairing or transportation of the machine, the operator must always use appropriate Personal Protective Equipment (PPE).

DANGER
Do not operate the implement while wearing loose fitting clothing that can give rise to entanglement in parts of the machine.

DANGER
Do not operate the implement when tired, not in good condition or under the influence of alcohol or drugs.

CAUTION
If the use of the machine is required at night or in conditions of reduced visibility, use the lighting system of the tractor and possibly an auxiliary lighting system.

3.2. EQUIPMENT SAFETY INSTRUCTION

WARNING
Use the Mulcher for its intended purpose only. Improper use can damage the Mulcher and cause serious injury to persons, animals, or death.

DANGER
The machine should be used by a single operator driving the tractor.

WARNING
Any unauthorized modification of the machine may cause problems in safety and relieves the Manufacturer from any liability for damages or injuries that may result to operators, third parties and objects.

WARNING
Before using the machine, familiarize yourself with its controls and its working capacity.

WARNING
Do not leave the Mulcher unattended with tractor engine running.

WARNING
Do not operate Mulcher on too muddy, sandy or rocky soils.

WARNING
Keep the machine clean from debris and foreign objects which may damage functioning or cause injury.

WARNING
Do not use the machine if the category of the connecting pins of the Mulcher does not match that of the trac- tor hitch system.

WARNING
Do not use the machine with missing bolts, screws, pins or safety pins, safety guards etc.

WARNING
Never use the machine to transport or lift people, animals or objects.

WARNING
Make certain, by adding front ballast, that at least 20% of the total weight (tractor, implement and ballast) is on the front axle of the tractor, to ensure stability.

WARNING
Before engaging the tractor PTO, make sure the tractor PTO speed is set as required for the Mulcher (540 rpm). Do not over speed PTO or machine breakage may result.

DANGER
Do not operate the Mulcher if the driveshaft is damaged. The driveshaft could be subject to breakage during operation, causing serious injury or death. Remove the driveshaft and replace it with an undamaged.

WARNING
With Mulcher disconnected from tractor, rest the driveline on the provided support of the mulcher.

3.3. OPERATING SAFETY INSTRUCTION

WARNING
Before using the machine, be sure to have cleared the operating area from obstacles (stones, branches, debris, etc...). Mark all the obstacles that cannot be eliminated (e.g. by means flags).

DANGER
Never engage the tractor PTO in the presence of people close to the driveshaft. The body, hair or clothing of a person can get caught in rotating parts, causing serious injury or death.

DANGER
Before engaging the PTO and during all operations, make sure that no person or animal is in immediate area of action of the machine. Never use the Mulcher if people are in his working area.

DANGER
It's absolutely forbidden to stand near the Mulcher with moving parts.

WARNING
The operator must operate machine lifting/lowering only from the driving seat of the tractor. Do not perform lifting maneuvers on side or behind the tractor.

WARNING
Before making changes in direction, turns or going in reverse, slightly lift the mulcher from the ground after disengaging the power take-off, to avoid damage to the machine.

DANGER
In presence of steep slopes (greater than 15 degrees) the tilling action may cause instability of the tractor with risk of serious injury or death hazard. Consult the manual for the tractor to determine the maximum slope that the tractor can deal with.

DANGER
Always disengage the PTO before raising the mulcher, and never engage the PTO with the Mulcher in the raised position. The machine might throw objects at high speed, causing serious injury or death.

WARNING
Never leave the driver's seat when the tractor is turned on. Before leaving the tractor, lower the Mulcher to the ground, disengage the PTO, insert the parking brake, stop engine and remove the key from the control panel.

DANGER
The PTO shields of tractor and implement side, the driveshaft shielding and the driveshaft retaining chains must be properly installed and in good condition, to avoid risk of entanglement with serious injury or death.

DANGER
Before engaging the PTO of the tractor, always make sure that the driveshaft is mounted in the correct direction, and that its clamping elements are properly connected both to tractor side and to Mulcher side.

WARNING
Stop operating immediately if blades strike a foreign object. Repair all damage and make certain rotor and blades are in good condition before resuming operation.

WARNING
Always disengage the tractor PTO when the driveshaft exceeds an angle of 10 degrees up or down while operating. An excessive angle with driveshaft rotating can break the driveshaft and cause flying projectiles.

CAUTION
Prolonged use of the Mulcher can cause overheating of the gearbox. Do not touch the gearbox during use and immediately after, it could be extremely hot and cause severe burn.

WARNING
All adjustment operations on the Mulcher must be performed by qualified and trained operators, with the trac- tor engine off, the PTO disengaged, the Mulcher lowered to the ground or on security stands, the ignition key off and the parking brake set.

3.4. TRANSPORTING SAFETY INSTRUCTION

WARNING

Before transporting the machine, determine the stopping characteristics of the tractor and implement.

WARNING
Transport only at speeds where you can maintain control of the equipment.

WARNING
When driving on roads, the implement must be in transport position adequately raised from the road surface, with tractor lifting hydraulics locked so that the Mulcher cannot be lowered accidentally.

DANGER
The implement may be wider than the tractor. Pay attention during transporting to persons, animals or obstacles exposed.

WARNING
When turning, use extreme care and reduce tractor speed.

WARNING
Do not operate the tractor with weak or faulty brakes or worn tires.

CAUTION
Always use tractor lighting system and auxiliary lighting system for an adequate warning to operators of other vehicles, especially when transporting at night or in conditions of reduced visibility.

DANGER
In case is required the lifting of the machine, make sure that the lifting device chosen is suitable to perform the operation safely, and use only the lifting points prescribed on mulcher.

3.5. MAINTENANCE SAFETY INSTRUCTION

WARNING
All maintenance and repairing operations must be performed by qualified and trained operators, with the tractor engine off, the PTO disengaged, the Mulcher lowered to the ground or on security stands, the ignition key off and the parking brake set.

WARNING
Perform repairs and replacements necessary to the machine using only original spare parts provided by the manufacturer or your Dealer.

DANGER
Perform maintenance operations always using appropriate Personal Protective Equipment (protective eye protection, hard hat, hearing protection, safety shoes, overall and work gloves, filter-mask).

CAUTION
Before any maintenance operation, make sure that the parts which may become hot during use (gear box) have cooled.

WARNING
Do not perform repairs that you do not know. Always follow the manual instructions and in case of doubt contact the Manufacturer or your Dealer.

DANGER
Do not swallow fuels or lubricants. In case of accidental contact with eyes, rinse well with water and consult a doctor.

3.6. INFORMATION ON STORAGE

WARNING
Never leave the tractor unattended with the Mulcher in lifted position. Accidental operation of lifting lever or a hydraulic failure may cause sudden drop of unit with injury or death by crushing.

DANGER
Following operation, or before unhooking the machine, stop the tractor, set the brakes, disengage the PTO, lower the Mulcher to the ground, shut off the engine, remove the ignition key and wait for all moving parts to stop.

WARNING
Make sure all parked machines are on a hard, level surface and engage all safety devices.

CAUTION
Place support blocks under Mulcher as needed to prevent unit from tipping over onto a child and/or an adult. A Mulcher that tips over can result in injury or death.

CAUTION
Store the unit in an area away from human activity.

3.7. SAFETY LABELS

The safety labels on the machine provide key information for use in the safety of the machine.
Make sure all the labels are in good condition. If the labels are deteriorated, they must be replaced as with others provided by the manufacturer and placed in the position shown in this manual. Make sure all the labels are readable. If necessary, clean them using a cloth with soap and water.

SAFETY LABELSPOSITION AND DESCRIPTION

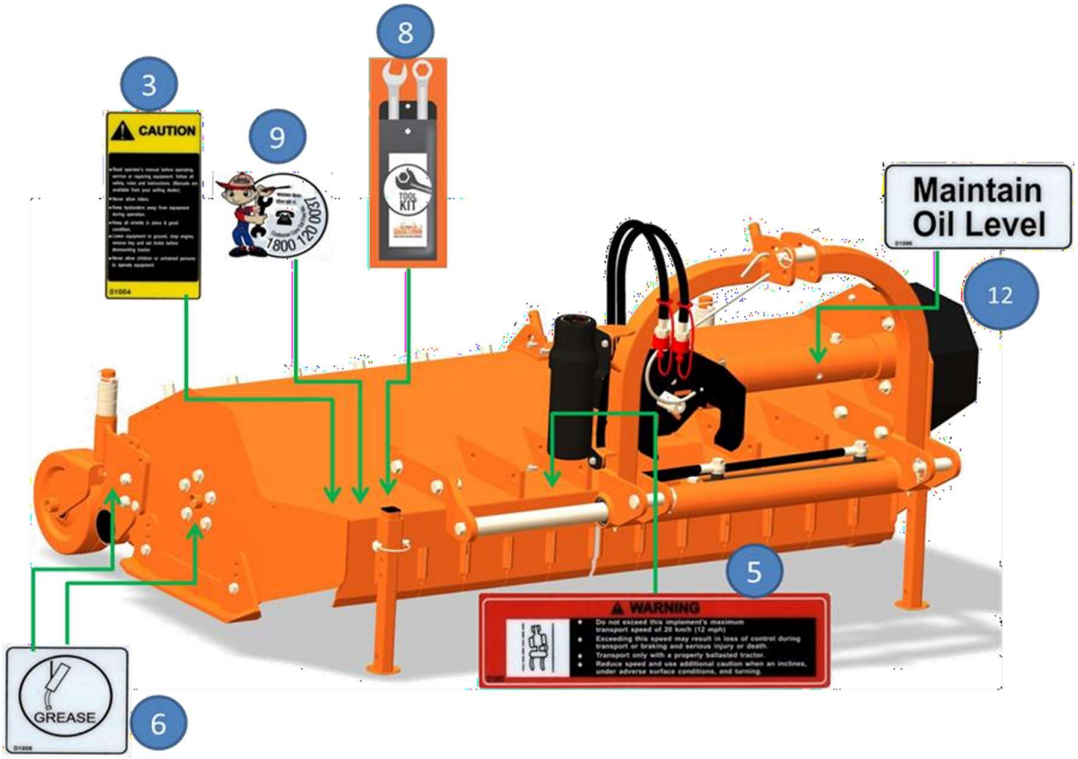

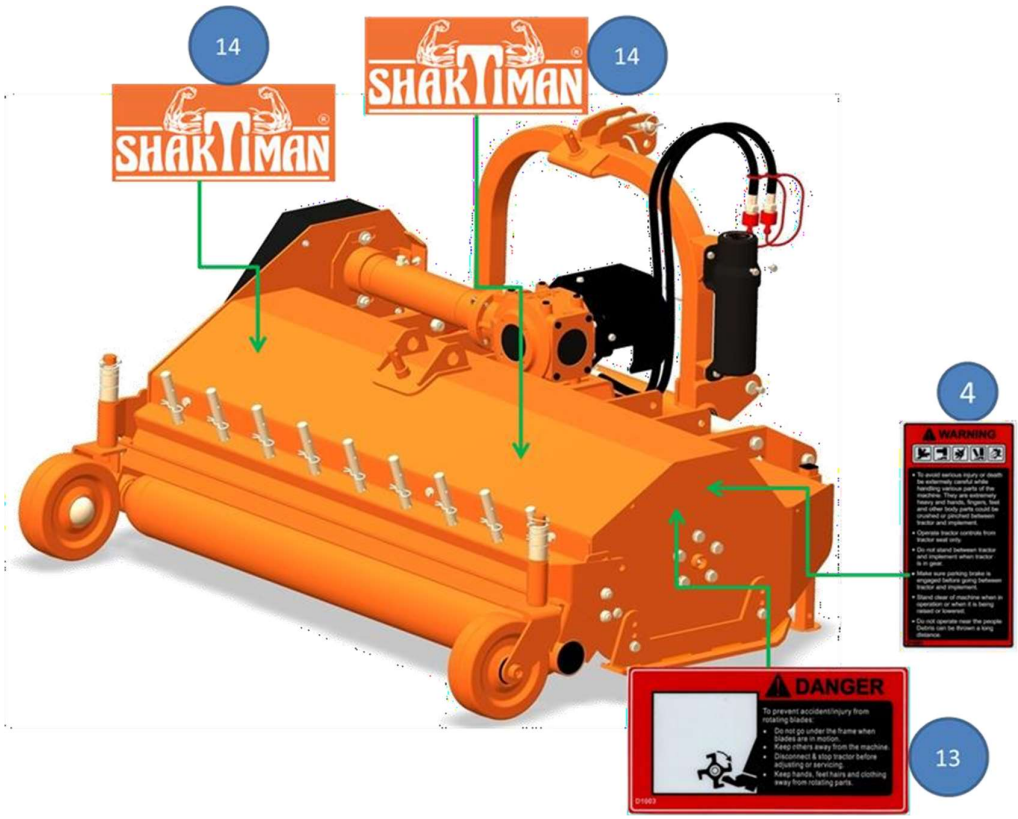

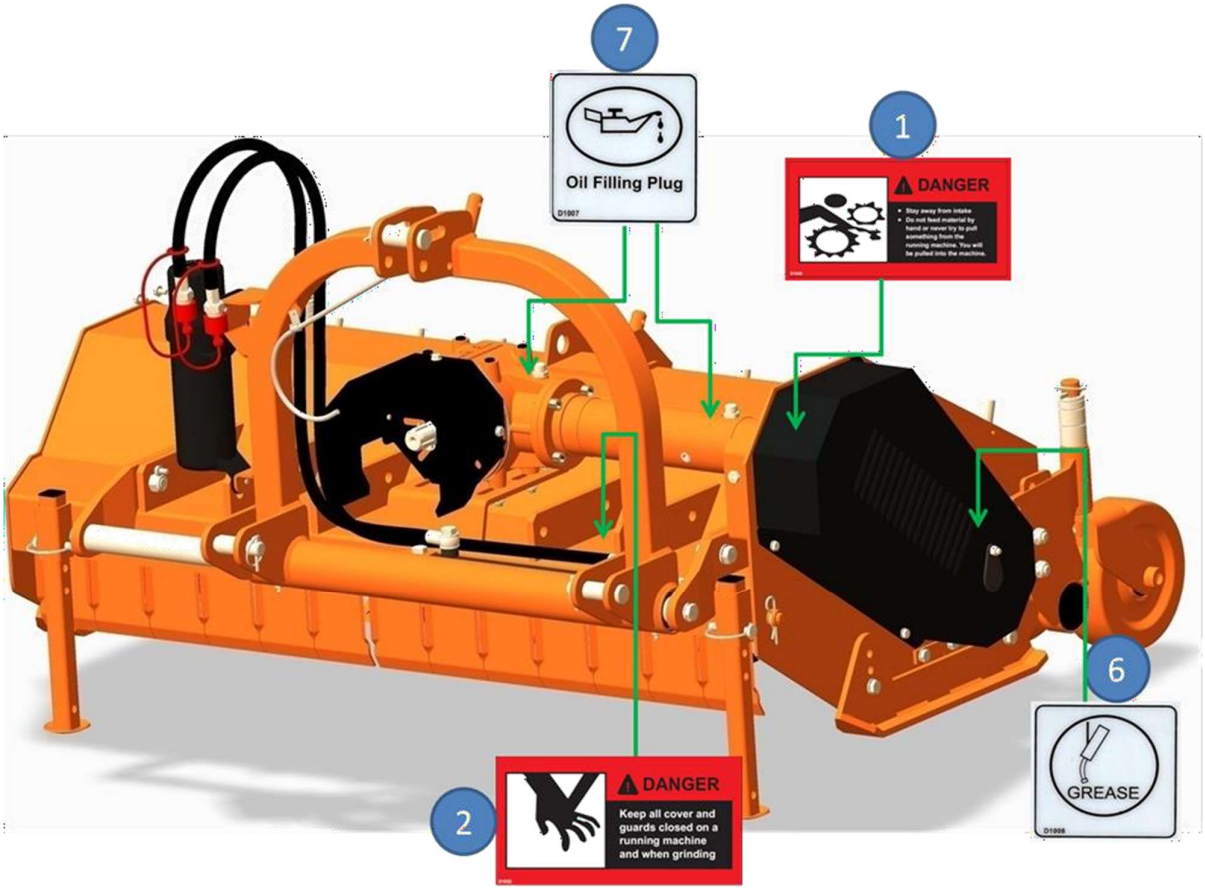
7
Oil Filling Plug
D1007
1
DANGER
Stay away from intake
Do not feed material by hand or never try to pull something from the running machine. You will be pulled into the machine.
6
GREASE
D1008
2
DANGER
Keep all cover and guards closed on a running machine and when grinding

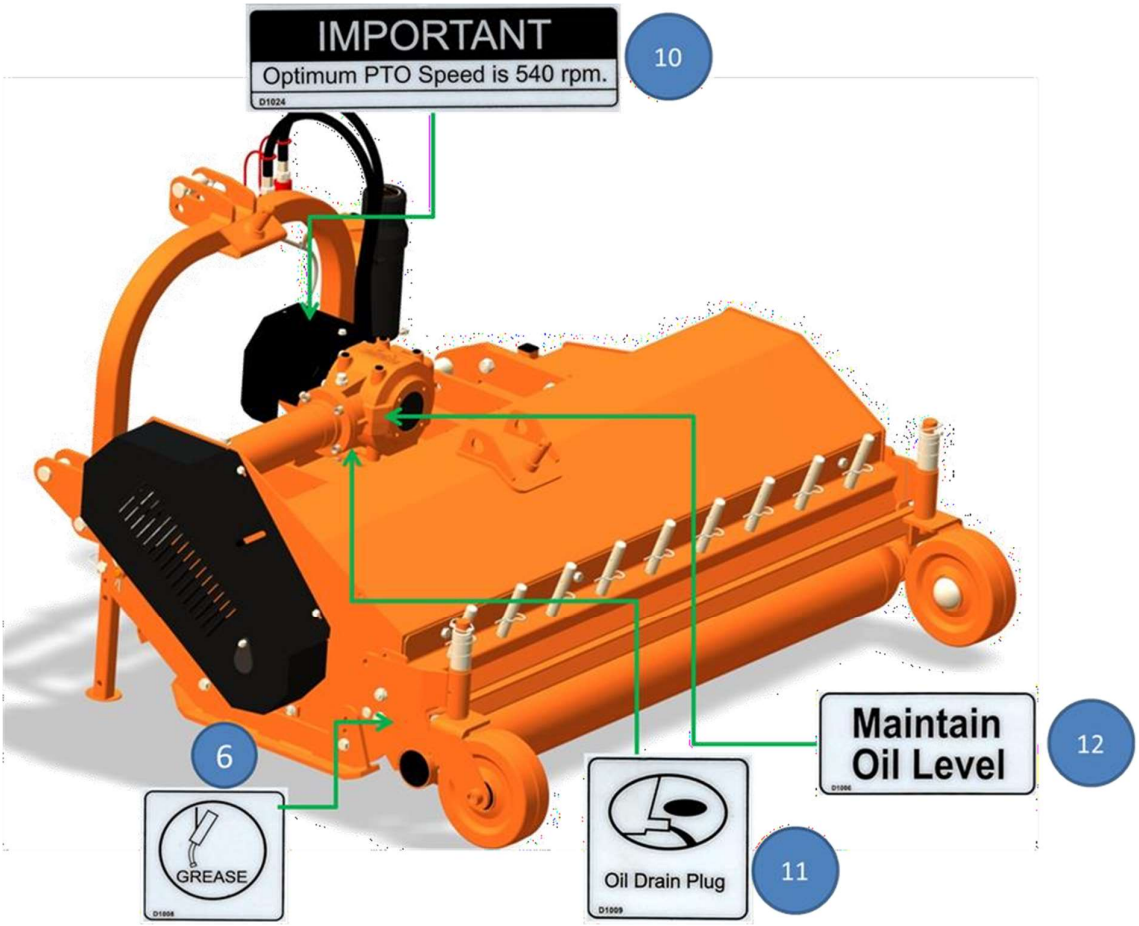
IMPORTANT
Optimum PTO Speed is 540 rpm.
D1024
10
6
GREASE
D1008
Oil Drain Plug
D1009
11
Maintain Oil Level
D1006
12

1		DANGER FEEDING
2		DANGER GRINDING WHEEL
3		CAUTION - NEW
4		WARNING STICKER - NEW
5		WARNING TRANSPORT - NEW

6	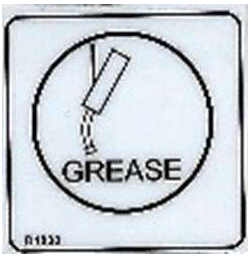	GREASE-NEW
7		OIL FILLING PLUG
8		FREE TOOL KIT - POUCH
9		TOLL FREE - NEW
10		OPTIMUM PTO SPEED -540 - NEW
11		OIL DRAIN PLUG

12		MAINTAIN OIL LEVEL
13		DANGER ROTOR BLADE - NEW
14	Cosmo Bully	COSMO BULLYD LOGO

4. SET UP

The Mulcher is delivered equipped with a driveshaft and related operating manual.
When the machine is delivered, check that there is no damage to the Mulcher or driveshaft. In case of damage or missing parts immediately notify the Manufacturer or your Dealer.
Because of his size, the machine could be delivered with some parts to be assembled.
In this case, the assembly of such parts is an owner's task, and must be performed carefully, with reference to the tables of the Spare parts section.

WARNING
For proper tightening torques of bolts and screws, refer to the table in this manual.

4.1. CONNECTING TO THE TRACTOR

The Mulcher is designed to be mounted on tractors equipped with 3-point Hitch Category I (ISO 730 standard).

To connect the Mulcher to the tractor the operator must do the following:
- drive the tractor in reverse, up to align the rear lifting arms to lower hitches of the Mulcher in parking (see picture below);

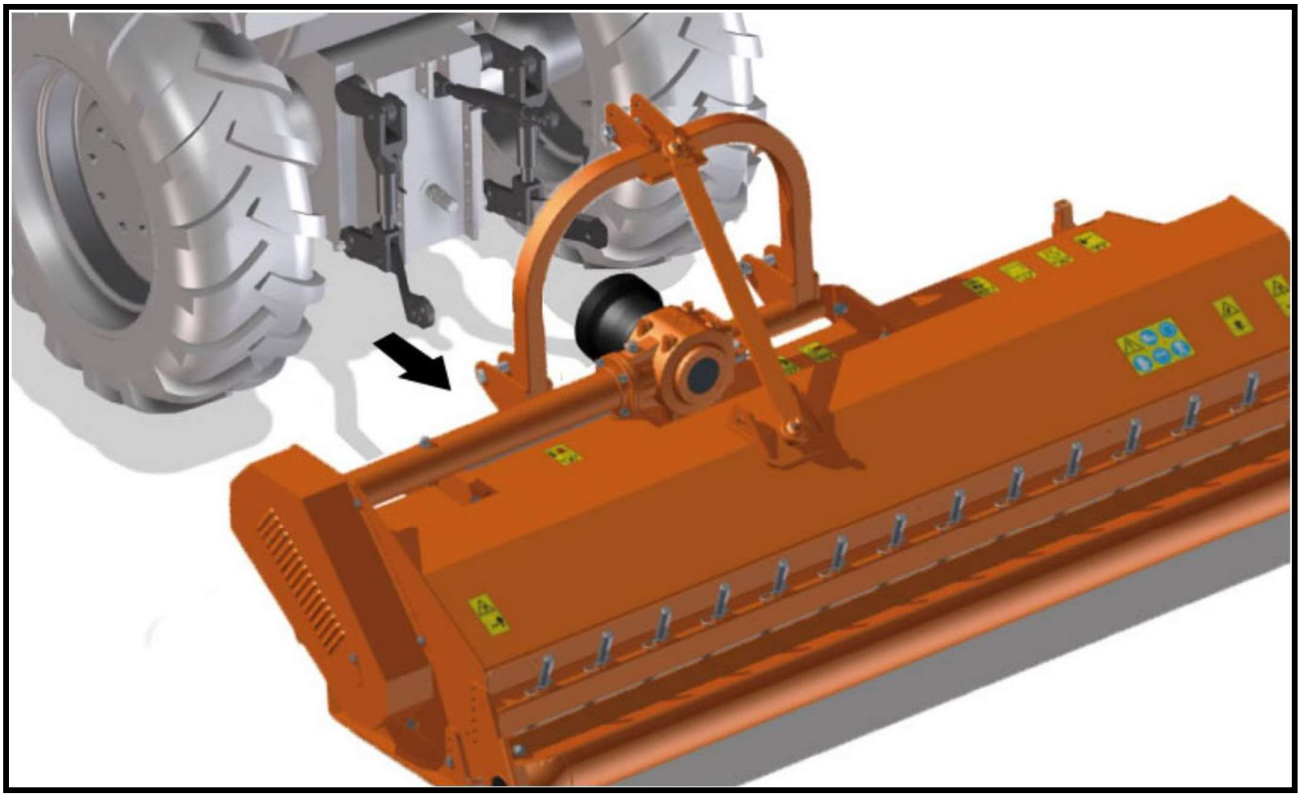

- set the tractor's parking brake, stop engine, remove the ignition key and get off the tractor;
- connect the lifting arms of the tractor to the lower hitches of the mulcher, and the 3-point top link to the upper hitch of the mulcher, through the use of the pins and the relative safety split pins;
- raise the Mulcher until PTOs of tractor and machine are at the same height, then adjust the 3-point top link so that the front of the machine is leveled to the back (the axis of the Mulcher PTO must be parallel to the ground), in order to limit stress transmitted to the Mulcher through the cardan shaft;
- make sure that left side of the Mulcher is leveled with the right, by adjusting the tractor lifting arms, then lock the arms to prevent swinging that could compromise the stability of tractor and machine;

• finally adjust the parking stand, placing it at the highest point by means of the related elastic pin.

WARNING
Before connecting the Mulcher to the tractor, make sure that tractor and Mulcher are on a flat, stable and dry surface

4.2. DRIVELINE INSTALLATION

The gearbox unit is equipped with a free wheel inside, able to absorb the rotor inertia during stopping, and to prevent possible damage to the transmission system machine-tractor that would be caused by an instantaneous stop of the rotor.
Consequently, the use of a cardan shaft with free wheel is not required.

Before installing the driveshaft, the operator must read the manuals of driveshaft and tractor, checking the rpm and direction of rotation of the tractor PTO match those of the mulcher.
If the direction of rotation of the PTO tractor does not match that of the machine, contact the Manufacturer or your Dealer.
To connect the driveshaft to the tractor and implement, the operator must:

- park tractor and Mulcher on a flat surface, with parking brake set, engine off, and ignition key removed;
- check that driveshaft, Mulcher and tractor are in good condition, otherwise provide for their replacement;
- remove the PTO shield of the Mulcher through the fixing screws;
- insert the driveline yoke on the implement PTO by first lining up the splines, then ensure its tightening onto the shaft through its fastener/snap pin;
- replace the PTO shield of the Mulcher through the fixing screws;
- insert the driveshaft yoke on the tractor PTO, then ensure its tightening onto shaft through its fastener;
- Hook to the tractor and Mulcher the two retaining chains of the driveline shielding, to prevent shielding rotation during functioning of the machine.

DRIVELINE LENGTH CHECK

Before operating the mulcher , ensure that the size of driveshaft is adequate. The driveshaft supplied with the machine has a standard length, therefore it may need an adaptation of the length, depending of the tractor which the Mulcher is combined.

The length of the driveshaft must be such to:
- avoid bottom out of the transmission tubes, when the driveshaft is in compressed position (when Mulcher is raised up off the ground);
- ensure an overlapping of the transmission tubes enough to transmit the torque required, when the Driveshaft is in max extension (when Mulcher is in its lowest position in the ground).

When the driveshaft is at its minimum length (max compressed position), there must be at least a 2 cm of distance between the ends of each transmission tube and the yokes side.
When the driveshaft is at its maximum operational extension, there must be an overlap between the tubes profiles of 15 cm at least.

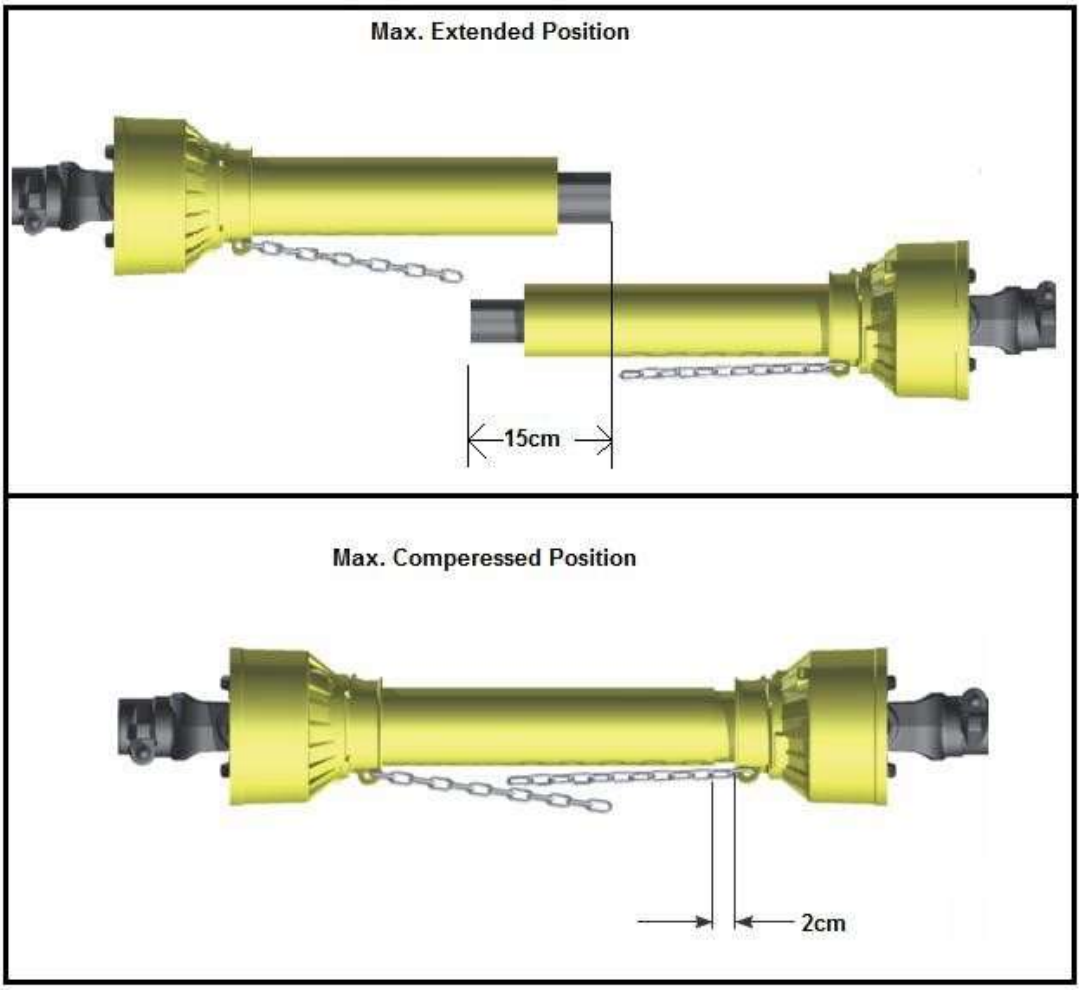

A driveshaft too long may cause structural damages to the tractor and machine. If the driveshaft is too long, it may be adapted by removing it and shortening the tubes according to the instructions provided by the Manufacturer in its use and maintenance manual.

A driveshaft too short can cause disengage of the tubes during operation, with severe hazard for the operator and structural damage to the tractor and machine. If the driveshaft is too short, it must be replaced with a longer one. In this case contact the Manufacturer or your Dealer.

IMPORTANT

• Before operating the mulcher for the first time, make sure that the driveshaft is lubricated in accordance with how indicated in the instruction booklet;

• before operating the Mulcher the first time, and after long periods of inactivity, make sure that the driveline clutch has run a short "run in" in accordance with what indicated in the instruction manual of the Manufacturer, removing the possible oxidation of the components that may compromise the correct slipping during the usage (see also section "Maintenance");

• Always engage the tractor PTO at low rpm to minimize the effect of the peak torque on the driveline and the machine.

4.3. TRACTOR-MULCHER STABILITY

The weight of the machine modifies the stability of the system tractor-mulcher, resulting in loss of steering Control and braking.

The front axle of the tractor should always load with at least 20% of the overall weight of the system tractor-mulcher.

CAUTION
Check the lifting capacity and stability of the tractor making sure the following relations are complied with (see table below for definitions):

- **M x (S1+S2) ≤ 0.2 x T x i + Z x (d+i)**
- **M ≤ 0.3T**

If this does not occur, apply the front ballast required. To determine the appropriate characteristics of the ballast, refer to the manual of the tractor.

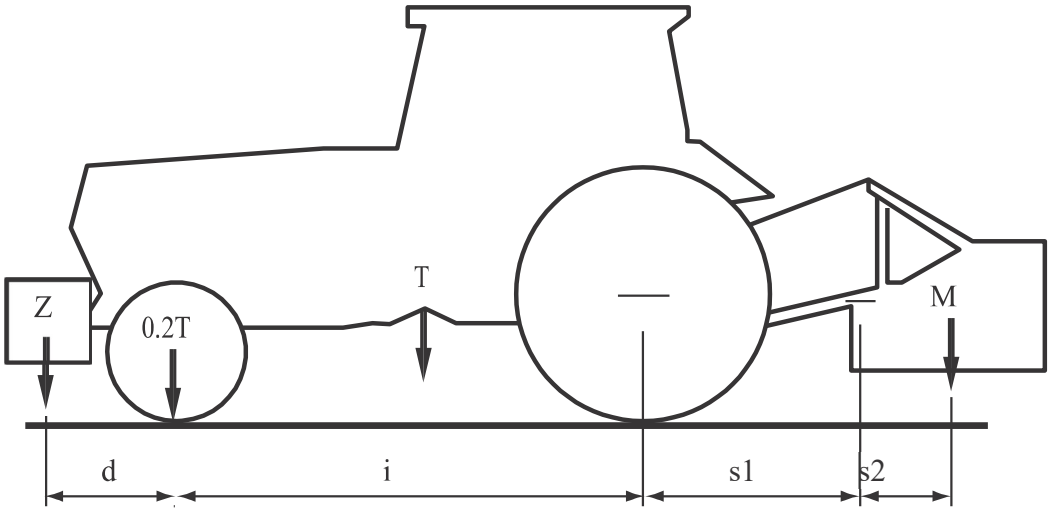

i = Tractor wheelbase (cm)
d = Distance between front axle and ballast center of mass (cm)
T = Weight of tractor + operator (75 kg)
Z = Ballast weight (kg)
M = Implement weight (kg)
s1 = Distance between rear axle and lower hitch points (cm)
s2 = Distance between lower hitch points and implement center of mass = 61 cm

5. OPERATING

Before operating the mulcher, make sure you have read and understood the operating manuals of the mulcher, tractor and PTO shaft, and followed what is described in the section "Set Up".

DANGER
During operation, adjustment, maintenance, repairing or transportation of the machine, the operator must always use appropriate Personal Protective Equipment (PPE).
Before starting work, ensure that all machine guards are in good conditions and fully functional.
During operation, the machine can throw material from the back: prevent people and animals to approach the operational area.

5.1. START-UP

WARNING
Before conducting the above inspections and service, make sure the tractor engine is off, all rotation parts are completely stopped and the tractor is in park with the parking brake engaged. Make sure the machine

is resting on the ground or securely blocked up and the tractor lifting hydraulics locked.

Before the start up and before each use, perform the following pre-operation inspections and service of the implement:

• check that the machine has not damaged functional parts and has all mechanical parts in good condition Repair and / or replace the damaged parts;
• check that the machine has no missing parts (pins, safety pins, plugs oil ...). Restore the missing parts;
• check that all guards and safety devices have no damages and are properly positioned. Repair and / or Replace the damaged shielding, restore the correct position;
• verify that the PTO driveshaft is properly installed (see section: Connection of the drive shaft);
• check that the driveshaft clutch is in good condition and that its components are not subject to "sticking" (see sections: Maintenance / Driveline);
• check the presence of lubricant in all greasing points of the machines (driveshaft supports...) (see sections: Maintenance / Driveline and Maintenance / Support rotor);
• Check for oil leaks from the gearbox or the transmission side cover. Identify the reason of loss, then Repair and / or replace the damaged components;
• Check the correct oil level in the gearbox and in transmission side box (see section maintenance);
•check that the drive belts are in good condition.
• check that blades are not excessively worn and the relating hardware is correctly tightened (see section Maintenance);
• check that all the machine hardware is properly tightened. Refer to the tightening table in the manual for proper torque values;
• check that all safety decals are correctly positioned, in good condition and legible. Replace any damaged decals;
• check that there is no constraint that may prevent the movement of equipment. Remove any constraint.

Before the start up and before each use, make the following checks on the operating area are identified before operating:

• check that area is clear of foreign objects (rocks, branches or debris). Remove any obstacle and visibly highlight obstacles that cannot be eliminated (e.g. by means flags);
• make sure in the working area exposed there are no people or animals;
• make sure the soil to be worked is not too grassy, muddy, sandy or rocky.

Once all the checks above have been done, start the tractor and the Mulcher as follows:

• start the tractor and engage the PTO at low rpm, making sure that the Mulcher is NOT in the raised Position but close to the ground, then increase the speed engine until to 540 rpm;
• lower the machine on the ground and simultaneously start driving the tractor at low speed. Subsequently increase the ground speed depending on ground conditions;
• If the environmental temperature is extremely cold, it's recommended to wait a few minutes with the PTO of the tractor at low rate before lowering the Mulcher completely on the ground;
• Drive (short distance) while operating the mulcher, then stop the tractor to check the quality of the work performed. If you need to get off the tractor, lift the Mulcher just out of the ground, reduce engine speed and disengage PTO, set the parking brake, stop engine and remove the ignition key.

If the cutting height and/or the quality of the shredding are not as desired, correct them by adjusting the roller or the wheels (see sections "Adjustments").

5.2. OPERATING INSTRUCTIONS

During operations:
• Always keep the tractor engine at rpm rate ensuring to the Mulcher the right power required for the

use;

- always keep a tractor speed adequate to working conditions (from 2 to 10 km/h approx.). Reduce speed in the case of hard or stony soils;
- choose a driving pattern that provides the maximum pass length and minimizes turning;
- when working in the hills, if you can do "climbing" in the sense of the slope, in any case do not work along the hillsides, making the steps from top to bottom to reduce the terrace. Where possible always try to «work up» the slope. If this is not possible avoid hoeing along the contours of the hill and hoe up and down the slope to avoid a terracing effect;
- always perform changes and reverse of direction with PTO disengaged and the Mulcher slightly lifted from the ground to avoid damage to the machine;
- periodically check for foreign objects wrapped around the rotor shaft and remove them, after disengaging PTO, turning off tractor engine, and removing ignition key;
- if the rotor strikes a foreign object, stop operating immediately, idle the engine speed and disengage the PTO. Wait for stopping of all rotating parts, then raise the implement and proceed to check and remove the object, after stopped the tractor, set the parking brake, stopped engine and removed the ignition key. Repair any damages immediately, and make sure rotor is in good condition before restarting operation;
- avoid overheating of the gearbox due to materials extremely difficult to shred, in order to avoid damages of the gearbox.

Typical problems that may occur operating the Mulcher are described into Troubleshooting section, together with their solutions.

5.3. ADJUSTMENTS

WARNING

All adjustment operations must be performed with the tractor engine off, the PTO disengaged, the Mulcher lowered to the ground or on security stands, the parking brake set and the ignition key off.

CUTTING HEIGHT ADJUSTMENT

The cutting height of the Mulcher is determined by the vertical position of the rear roller (or the pivoting wheels) on the machine.
Lifting up the roller (or the wheels) the tools of the rotor get closer to the ground, reducing the cutting height. On the contrary, lowering the roller (or the wheels) the tools increase their distance from the ground, increasing the cutting height.
After a change of the working height, make sure that the tools of the rotor are not interfering with the soil: a direct contact with the ground would facilitate the rapid wearing of the tools.

If the Mulcher is provided with a stabilizer roller, to adjust the cutting height:

- lift the mulcher, put it on safety stands, then turn off the tractor engine, disengage the PTO, set the parking brake and remove the key from the panel;
- remove the bolts (1) that secure the roller supports to the frame on both sides;
- position the roller according to the height required;
- Replace and tighten the bolts (for the correct torque value refer to the torque table of the manual).

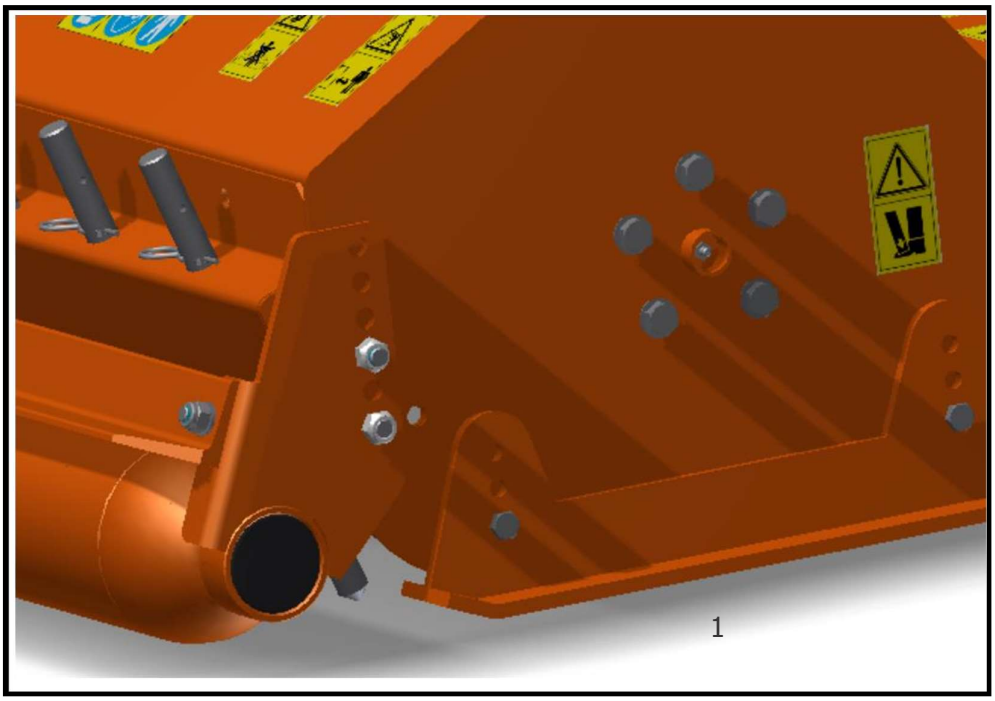

Depending on the different roller positions, it is possible to set four different cutting heights: 32-57-82 and 107 mm.

When finished, make sure that the roller supports are positioned at the same height, and check, with the Mulcher resting on the ground, that the front of the machine is leveled with the back. If necessary, adjust the level through the 3-point top link of the tractor.

If the Mulcher is provided with the pivoting wheels, to adjust the cutting height (see picture):

- lift the mulcher, put it on safety stands, then turn off the tractor engine, disengage the PTO, set the parking brake and remove the key from the panel;
- while holding up vigorously the wheel with bracket, remove the snap pin (1);
- remove the wheel with bracket and spacers (2) that determine the cutting height;
- insert one or more spacers in the lower part of the shaft of the bracket. The number of the spacers shall be based on the increase of the cutting height desired;
- reposition the wheel with bracket into the original place, and put the remaining spacers on top of the shaft;
- reinsert the snap pin;
- repeat the same procedure to the opposite wheel, making sure the spacers are positioned exactly like on the first wheel.

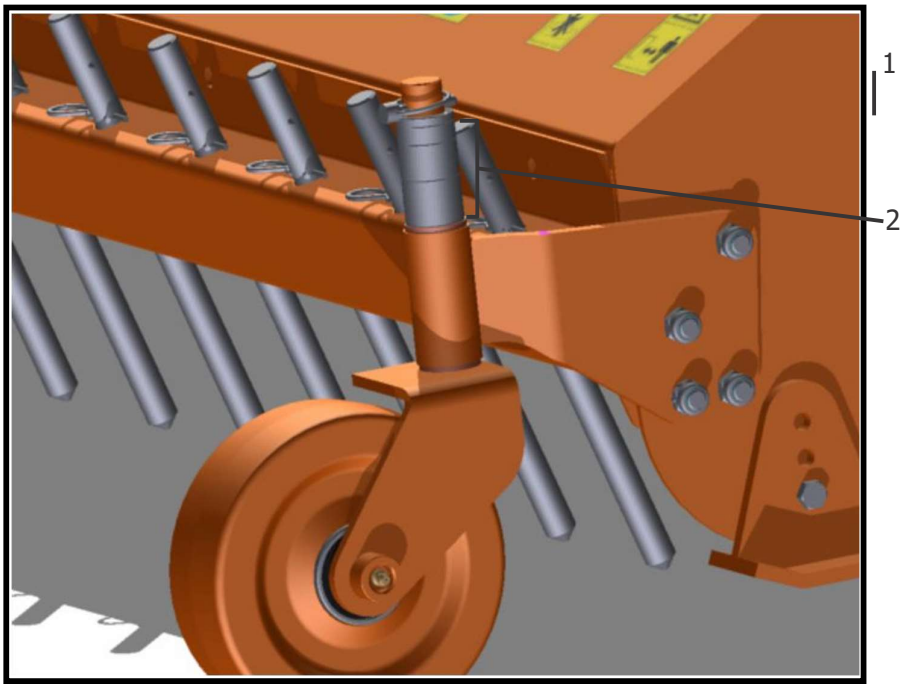

Depending on the different position of the spacers on the shaft, it is possible to set five (5) different cutting heights: 70, 76, 89, 114 and 145 mm.

When finished, make sure that the pivoting wheels are positioned at the same height, and check, with the Mulcher resting on the ground, that the front of the machine is leveled with the back. If necessary, adjust the level through the 3-point top link of the tractor.

SKID ADJUSTMENT

The position of the skids can be adjusted by:

- loosening and removing the bolts (1) that clamp the skids to the side plates of the frame,
- reposition the skids according to the needs, and
- retightening the bolts (1).

The skids can be placed in 3 different positions but, in the presence of the stabilizer roller or the pivoting wheels, they have the unique function of protecting the side plates of the frame from any direct contact with the ground.
Therefore, make sure the skids are not positioned below the roller or wheels, because the latter two a the devices holding the Mulcher lifted of the ground (and not the skids).

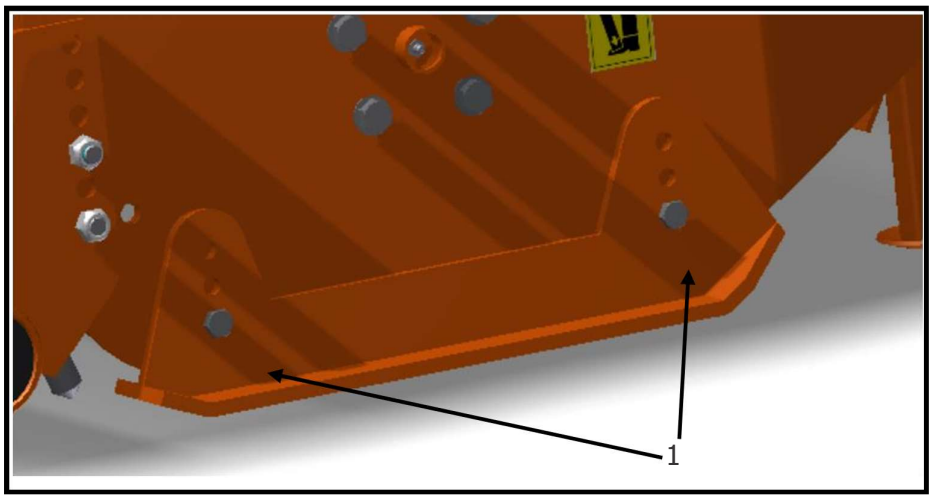

RAKES ADJUSTMENT

The function of the rear rakes is to obtain a finer finish by holding the material within the shredding chamber.
It is therefore recommended to perform the racks adjustment immediately after executing the cutting height adjustment.

To do this follow these steps:
- remove the cotter pin (1) from one of the rakes;
- push the rake downwards in order to retain more material inside the shredding chamber and obtain a finer mulch. Vice-versa, pull the rake upwards to retain less material inside the shredding chamber and to obtain a coarse mulch;
- insert the split pins (1) on the hole of the rake closest to rear bar, after setting the desired position;
- repeat the procedures adjusting all other rakes to the same height of the first one.

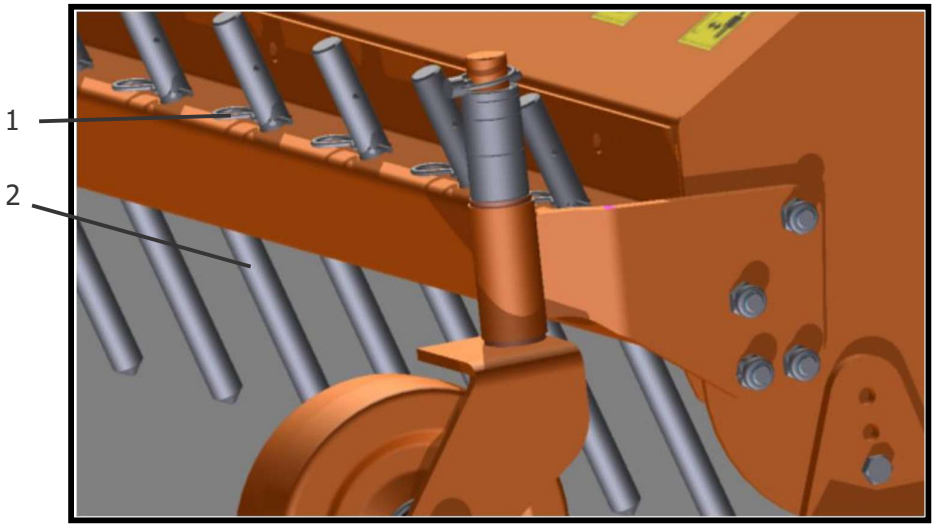

SIDE SHIFTING ADJUSTMENT

The SFM mulcher s can be configured with mechanical or hydraulically shifting device.

In case of mechanical shifting device, to shift the side position of the machine, act as described below:

- lift the mulcher, then turn off the tractor engine, disengage the PTO, set the parking brake and remove the key from the panel;
- unscrew and remove the bolt (1);
- manually move the body of the Mulcher by pushing from one side, until is reached the position required overlaying the holes of the mechanical jack;
- reinsert the bolt removed earlier and tighten.

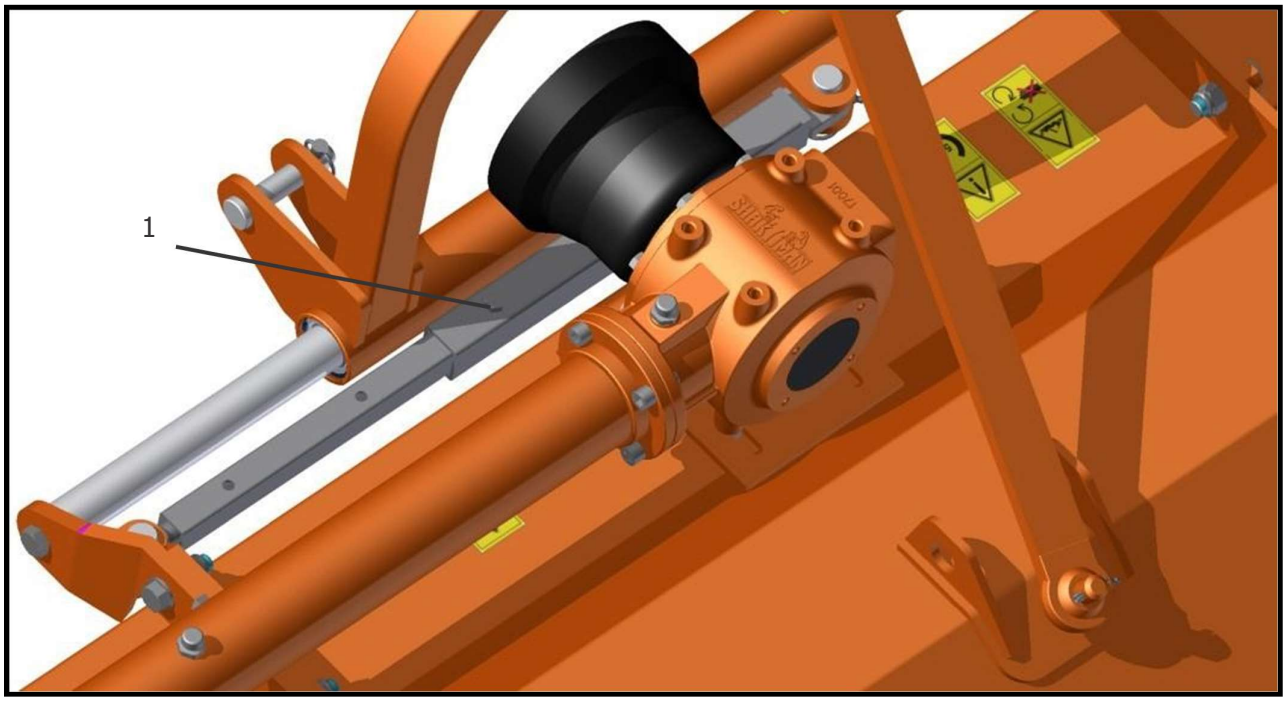

In case of configuration with hydraulic cylinder, the side adjustment of the frame is affected by actuating the cylinder directly by the hydraulic control system of the tractor, after performed the connection of the machine hydraulics to the tractor.

BELT TENSIONING ADJUSTMENT

To check the correct belt tensioning of the side transmission,

- remove the safety cover of the belts by loosening the four bolts (1) that secure it to the frame(see picture):
- Check the correct belt tension.

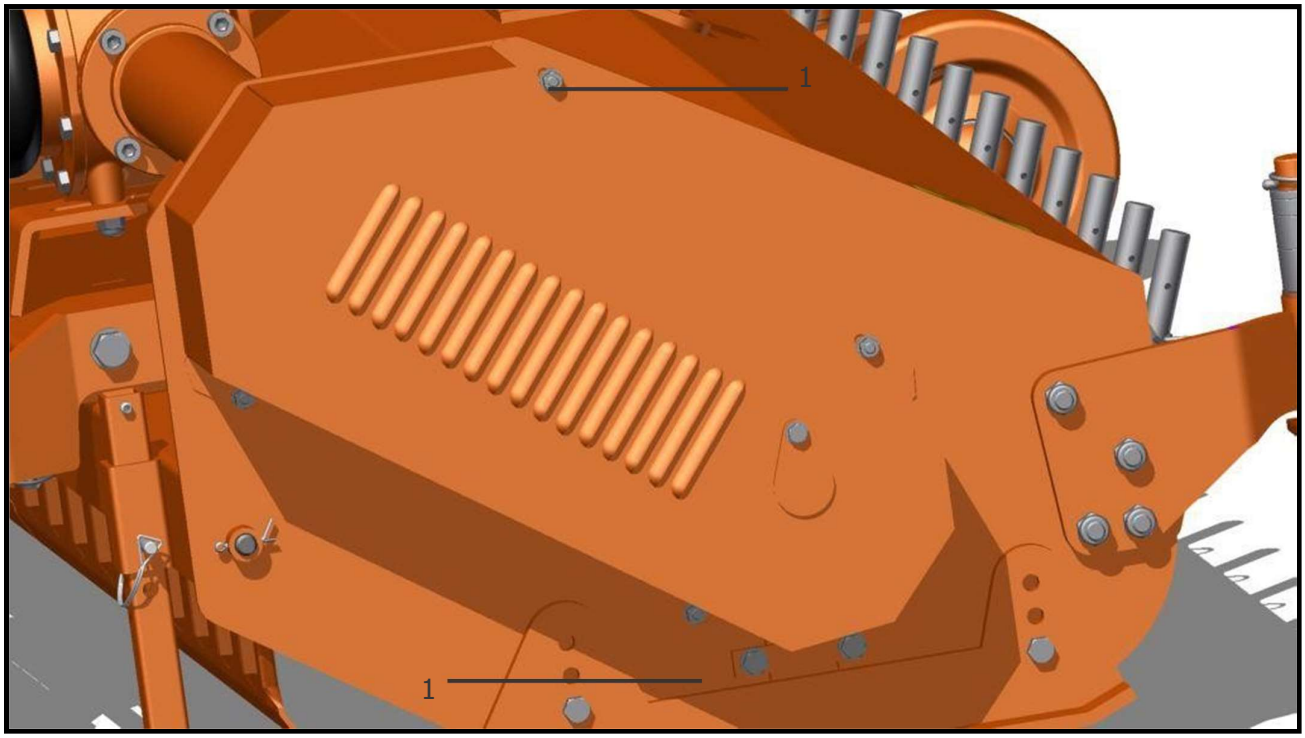

Apply a force of about 10-15 kg on the middle of the belts set, and measure the entity of the consequent deflectionof the belts (see picture):

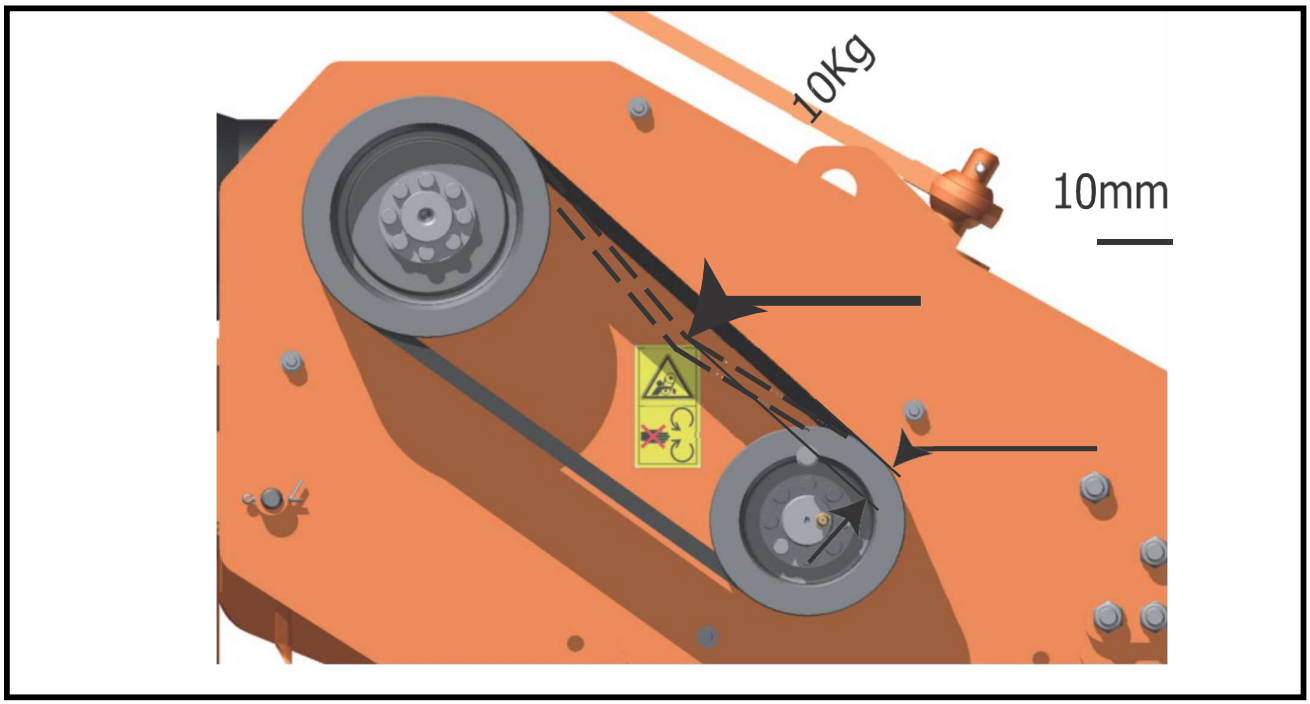

If the deflection is about 10 mm, the tension is correct.
If is not so, proceed with the adjustment in the following way (see picture below):

- loosen the four bolts and washers (1) under the gearbox which lock it to the frame;
- loosen the two bolts (2) fixing the extension tube to the side plate of the frame;
- while holding the screw (3), loosen the lock nuts (4);
- tighten the tension nut (5) if the tensioning found is too low (deflection of belts higher than 10 mm); unscrew the tension nut (5) if the tensioning found is too high (deflection of belts lower than 10 mm).
- retighten the lock nuts (4) and the two bolts (2) fixing the extension tube to the side plate of the frame;
- move the gearbox in order to restore the position of the extension tube perpendicular to the side plate of the mulcher;
- retighten the four bolts and washers (1) under the gearbox;
- reposition the safety cover in his original place.

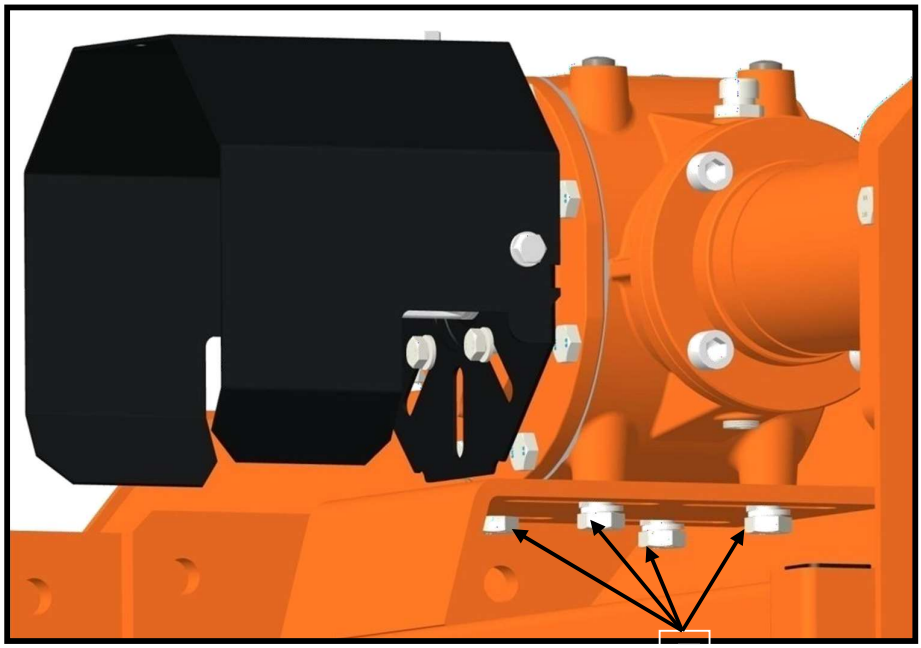

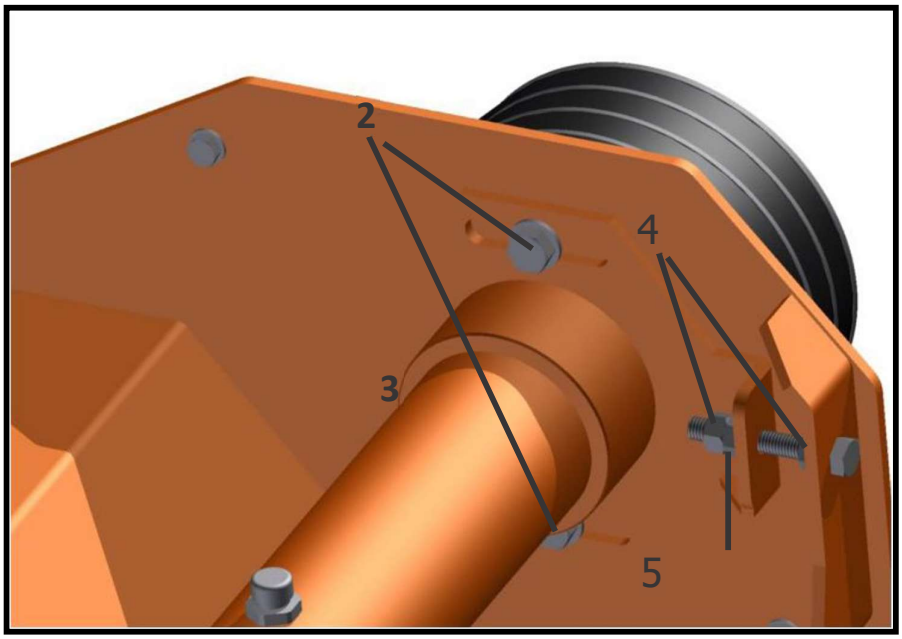

If the replacement of the set of belts is required:

- remove the safety cover of the belts by loosening the four bolts that secure it to the frame
- loosen the four bolts and washers (1) under the gearbox which lock it to the frame;
- loosen the two bolts (2) fixing the extension tube to the side plate of the frame;
- loosen the lock nuts (4) and the tension nut (5) until the extraction of the belts from their seats on the pulleys is permitted, starting from the external position (a)
- reinsert the new belts in succession contrary to what done for the disassembly.
- adjust the belt tension according to the indications done above
- retighten the two bolts (2) fixing the extension tube to the side plate of the frame;
- move the gearbox in order to restore the position of the extension tube perpendicular to the side plate of the mulcher;
- retighten the four bolts and washers (1) under the gearbox;
- reposition the safety cover in his original place.

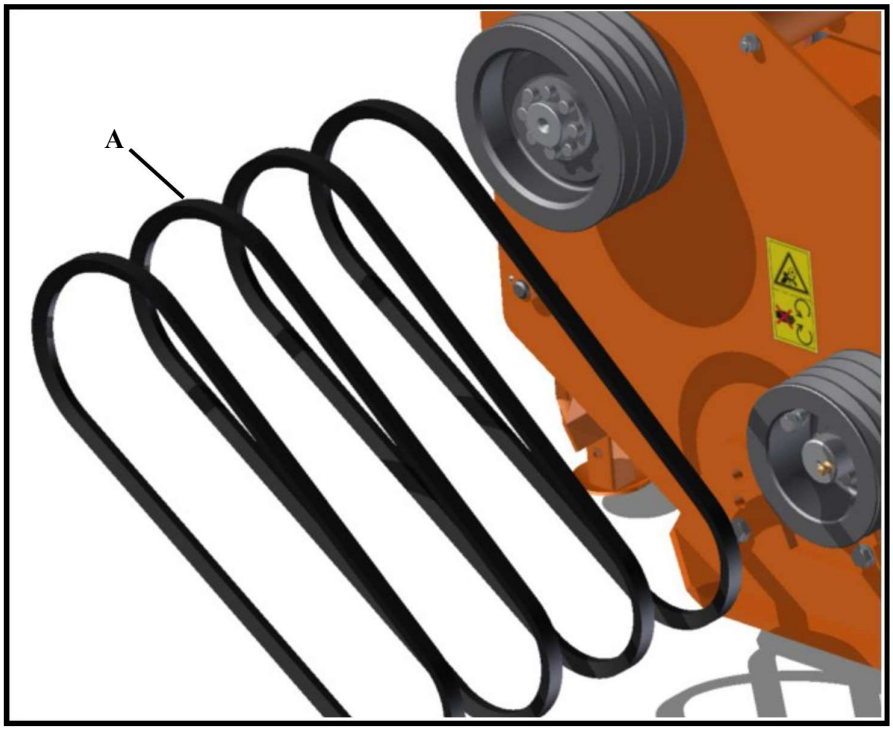

5.4. STOPPING AND DISCONNECTION

To stop the Mulcher at the end of a working session:

- bring the tractor to a complete stop;
- place the transmission in park or neutral;
- reduce the engine speed, then disengage the PTO;
- wait for stopping of all rotating parts;
- lower the implement to the ground;
- set the parking brake;
- shut down the engine and remove the key before exiting the tractor;
- do the cleaning and maintenance required to make the machine ready for later use (see section Maintenance).

WARNING

Never leave the tractor unattended with the implement in the lifted position.

To disconnect the mulcher from the tractor (e.g. to make a change of implement):

- adjust the parking stand to the lowest position, through the use of relative retaining pin;
- park the tractor on a dry and level surface;
- reduce the engine speed, then disengage PTO;
- wait for stopping of all rotating parts;
- lower the implement to the ground;
- set the parking brake;
- shut down the engine and remove the key before exiting the tractor;
- place safety blocks under Mulcher to prevent unit from tipping over onto a child and/or an adult. A Mulcher that tips over can result in injury or death;
- disconnect the driveline from the tractor PTO and rest it on the provided support of the mulcher ;
- disconnect the top link and rear lifting arms of the tractor from the Mulcher hitches;
- check the Mulcher stability. If needed, place additional safety blocks;
- get on the tractor, start the engine and move away from the Mulcher slowly;
- make sure the mulcher remains stored in a protected area, to prevent that unauthorized personnel can approach it.

Before a long term storage (e.g. at seasons end), do cleaning and maintenance operations as specified in sections MAINTENANCE and STORAGE.

5.5. TRANSPORTING

To set the mulcher for transportation, perform the following steps:

- idle tractor engine, disengage tractor PTO, and wait for stopping of all rotating parts;
- lift the Mulcher until the transport position, making sure the driveline transmission tubes does not contact tractor or mulcher. A minimum gap of 2 cm should be leaved between the tubes and tractor and Mulcher (see also section Driveline installation);
- lock the tractor lifting hydraulics, turn off the engine, set the parking brake, remove ignition key and get off the tractor;
- adjust the parking stand to the highest position, through the use of relative retaining pin, to prevent its possible damage during transport.

When driving on public roads, follow strictly all local laws and traffic egulations.

WARNING
When driving on public roads, reduce your speed, be aware of traffic around you and proceed in such a way that faster moving vehicles may pass you safely.

6. MAINTENANCE

Proper and regular maintenance ensures a long life of the equipment, avoids failures and saves time and repair costs.
Periodic inspections and maintenance operations described in this section must be performed by operator in the times and terms prescribed. Failure to comply with maintenance prescriptions can compromise the functioning and duration of the machine, and consequently invalidate the warranty.
The frequency of maintenance indicated refers to normal conditions of use: it must be intensified in severe operating conditions (frequent stops and starts, prolonged winter season etc ...).
Repairs, maintenance and modifications other than those mentioned in this paragraph should NOT be performed without consulting the Manufacturer or your Dealer. Manufacturer, as the case, may give the authorization to proceed with the repair together with all necessary instructions.
Wrong or inappropriate repairs or maintenance may generate abnormal operating conditions, equipment damage and generate risks for the operator.

WARNING
For safety reasons, all maintenance operations must be performed with tractor PTO disengaged, Mulcher stopped and completely lowered to the ground or onto support blocks, parking brake set, tractor engine shut off, and ignition key removed.

IMPORTANT
Respect the environment. Store or dispose of unused chemicals as specified by the chemical Manufacturer.

6.1. ROTOR TOOLS REPLACEMENT

Frequently check the wear condition of the tools on the rotor (Y blades or hammers) through visual inspection. The wear of the tools is very variable depending on the type of soil.
Replacement of the tools is necessary when the operator notices increase of power absorption during operations, or when the blade or hammer dimension is significantly reduced compared to the original.
The use of the machine with tools in bad condition compromises the quality of the work.

Before perform replacement of the blades:
• idle tractor engine, set the parking brake, disengage tractor PTO, and wait for all moving parts to come to a complete stop;
• place the machine slightly lifted from the ground on safety blocks or mechanical stands;
• lock the control lever of the hydraulic lift of the tractor;
• turn off the tractor and remove the key from the control panel.

To perform the replacement of blades:

- remove the bolt that locks the couple of Y blades (or the hammer) in the rotor. For the Y blades, two bushing are placed on the bolt to fill the gap between the blades and the holders of the rotor;
- place the new tool instead of the one worn out, and tighten the bolts with washers, referring to the torque values shown in "Table torques" in the manual. Be sure to install the cutting edge facing in the direction of rotation of the rotor. For the rotor with Y blades do not forget to place the related bushings between the blades and the holders.
- repeat the same procedure for all the Y blades (or hammers);

- repeat this process for all the tools.

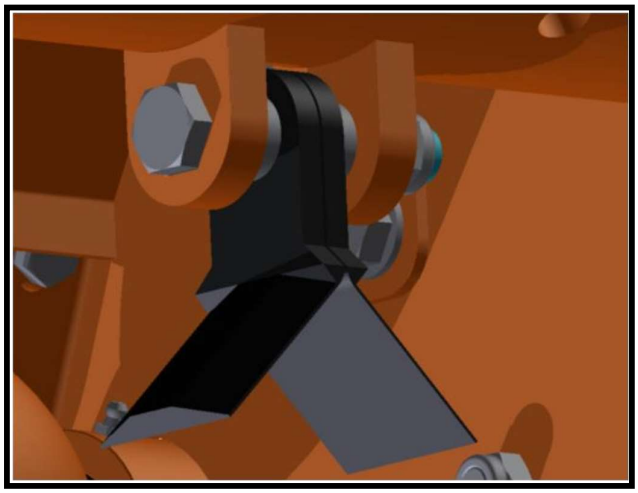

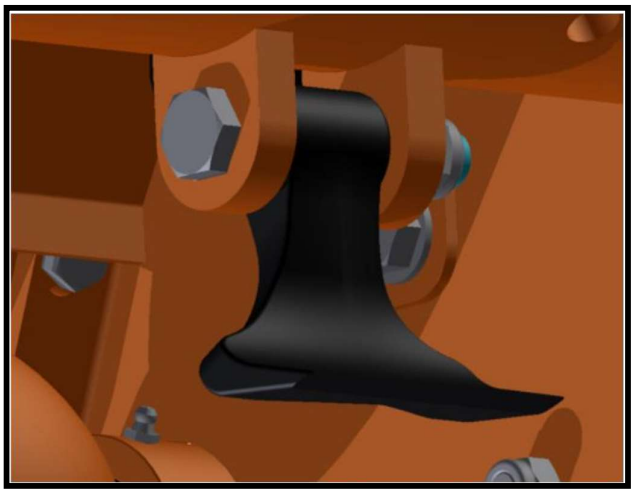

IMPORTANT
Remove and install one blade/hammer at a time to ensure blades/hammers are correctly oriented when installed.
Replace worn blades only with original parts.

WARNING
When the blades/hammers are worn out it is necessary to replace the full set of tools.
Replacement of only some of the tools is certainly cause of the rotor unbalance, machine vibrations and can compromise the reliability of the Mulcher and generate risks to the operator.

CAUTION
Worn blades and hammers may be very sharp!

6.2. GEARBOX LUBRICATION

Lubricant: HP 85W140 (API GL4) oil gear or equivalent

CAUTION
Before touching the gearbox wait until it has cooled sufficiently.

Check the oil level every 50 hours, making sure the level is aligned with the level plug (1).
To perform the check, it is necessary to remove the screws (2) holding the safety cover on the gearbox, which prevents access to the plug.

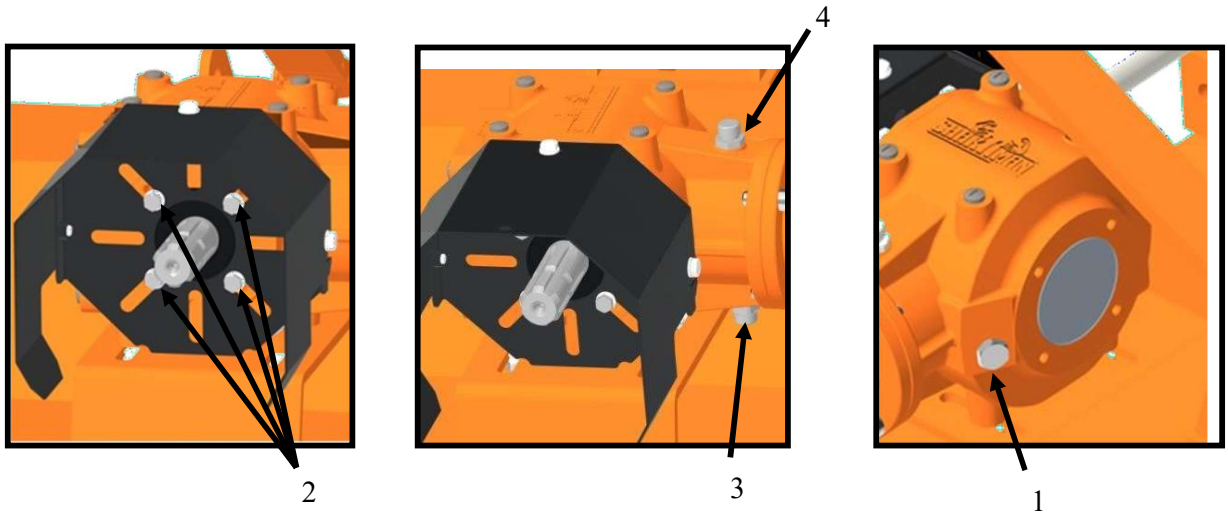

If the oil level is below the line of the level plug, it's necessary fill up oil till restore the correct level.

The oil change must be performed:

- after the first50 working hours;
- each 500 working hours.

To make the oil change:

- unscrew the level plug (1);
- place a tank under the oil drain plug (3)
- unscrew the oil drain plug (3) and drain oil completely into the tank;
- retighten the drain plug (3);
- unscrew the oil filling plug (4) on the top of gearbox;
- fill up oil till the level reach the hole of the level plug (1);
- retighten level plug (1) and the filling plug (4);
- replace the safety cover retightening the screws (2);
- dispose the discharged oil into containers for used oil.

IMPORTANT
Frequently check possible oil leaks from the Mulcher through visual inspection, and in case of leakage provide immediately proper maintenance.
Avoid oil leaks on the ground when restoring oil level or making oil change.

6.3. ROTOR BEARINGS LUBRICATION

Lubricant: AGIP GREASE MU EP 2 lithium-type grease (or equivalent)
Frequency: each 20 working hours

Lubricate with multipurpose lithium-type grease through a manual grease pump, after meticulous cleaning of grease nipples.

To perform lubrication (see pictures):
- turn the cover (1) and inject grease through the nipple (2);
- inject grease through the nipple (3).

IMPORTANT
Make sure to clean the fitting grease nipple before using the grease gun.
Do not let excess grease collect on or around parts, particularly when operating in sandy areas.

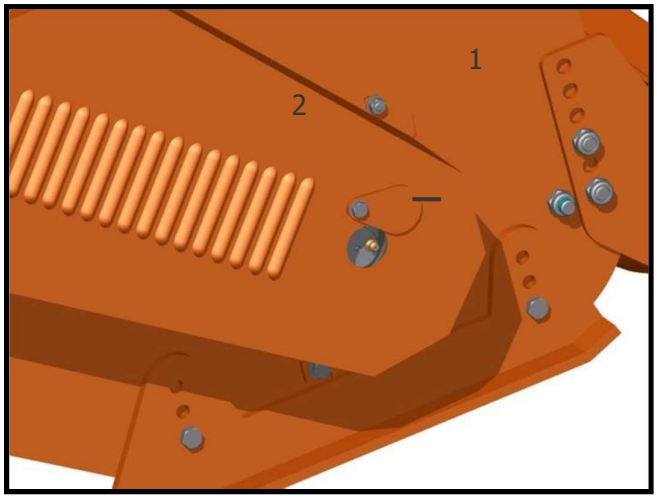

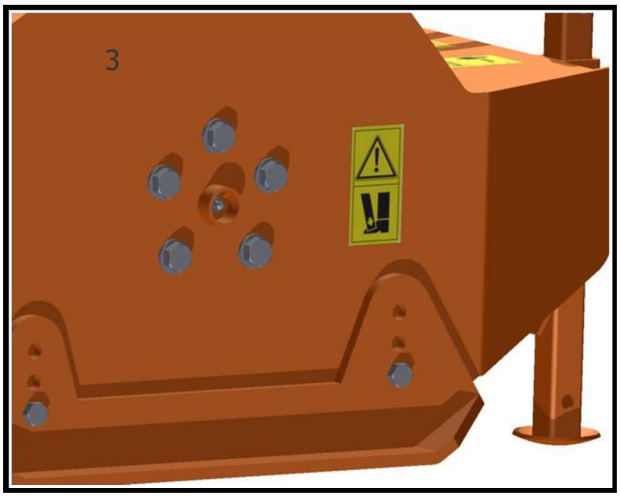

6.4. ROLLER BEARINGS LUBRICATION

Lubricant: AGIP GREASE MU EP 2 lithium-type grease (or equivalent)
Frequency: each 20 working hours

To perform lubrication, inject grease into the nipples (1) and (2), located on the upper part of the roller bearing supports (see pictures).

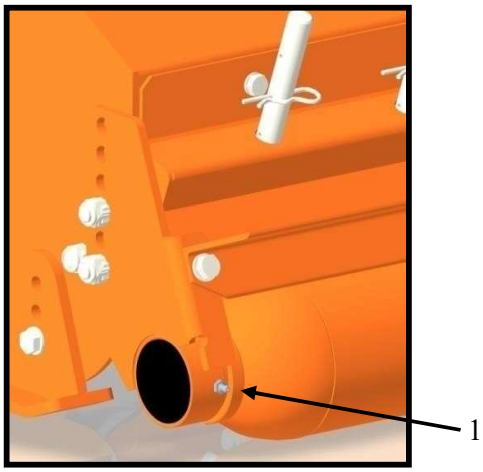

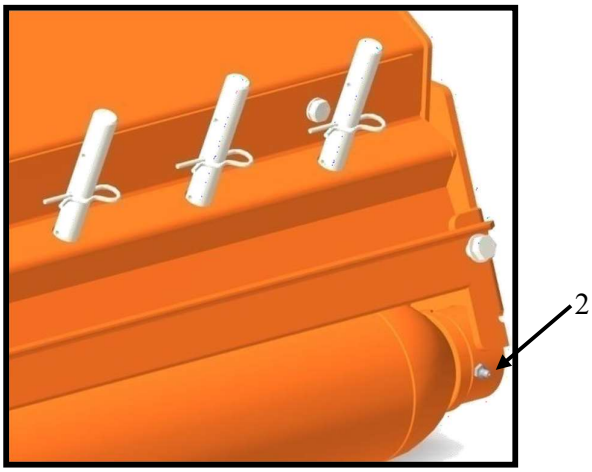

6.5. WHEELS BRACKETS LUBRICATION

Lubricant: AGIP GREASE MU EP 2 lithium-type grease (or equivalent)
Frequency: each 20 working hours

To perform lubrication, inject grease into the nipple (1), located on the inner part of the wheel bracket (see picture).

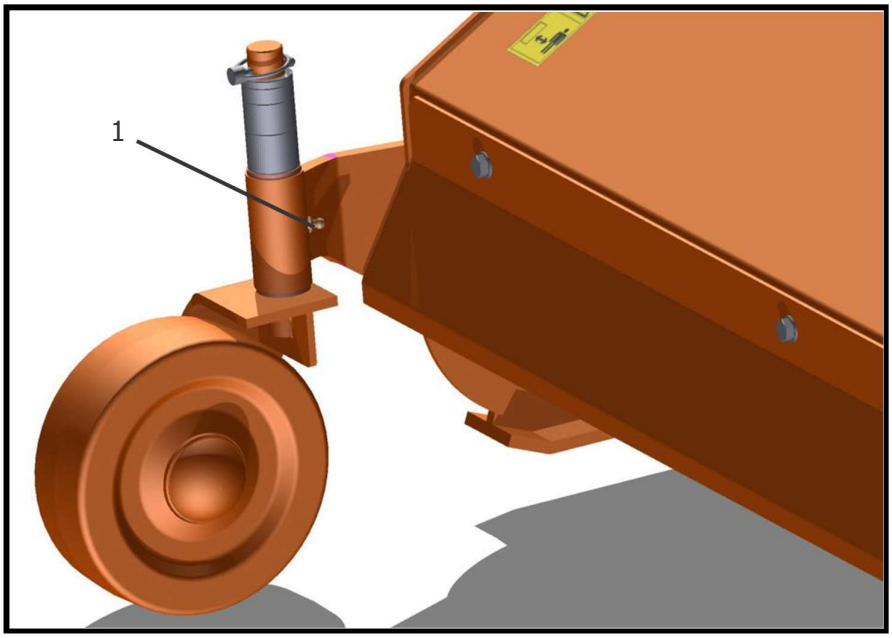

6.6. 3-POINT HITCH LUBRICATION

Lubricant: AGIP GREASE MU EP 2 lithium-type grease (or equivalent)
Frequency: each 20 working hours

To perform lubrication of the shifting parts of the 3-point hitch (see pictures):
- inject grease into the nipples (2), located on the lower part of the shifting tube of the hitch;
- inject grease into the nipples (3), located on the rod-tie of the hitch.

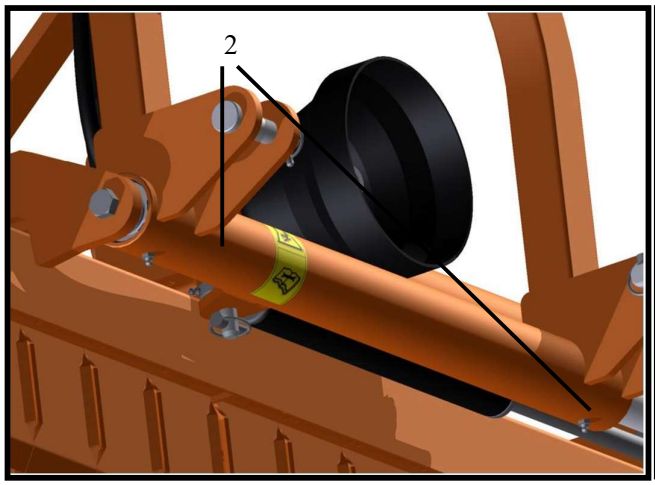

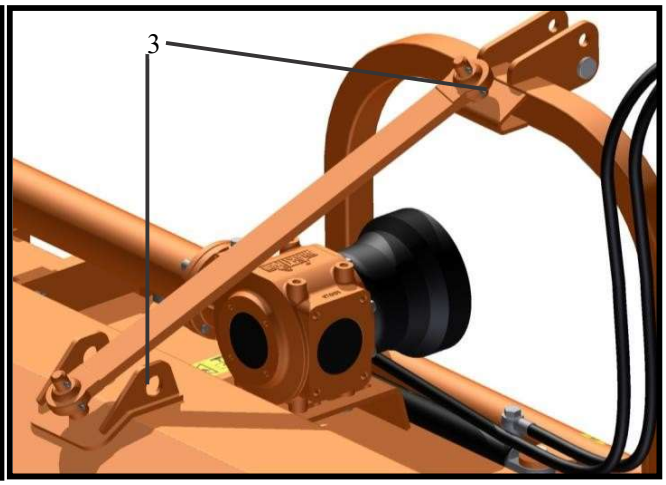

6.7. DRIVE BELTS REPLACEMENT

Frequently check the wear of the belts, and if one or more of these appears worn replace the full set.
To replace the drive belts, refer to the section "Belts tensioning adjustment".

6.8. DRIVESHAFT MAINTENANCE

Lubricant: AGIP GREASE MU EP 2 lithium-type grease (or equivalent)
Frequency: each 20 working hours

Grease crosses, sliding parts of protective shielding and driveshaft transmission tubes.

IMPORTANT
For details about maintenance and lubrication of the driveshaft, refer to the user manual of the driveshaft Manufacturer.

NOTE
For the driveshaft service parts, refer to the user manual of the driveshaft Manufacturer.

7. STORAGE

Before leaving the machine unused for a long time, it's necessary to perform following tasks to preserve the appearance and functionality of the machine, and to make easier the restart at later use:

- park the Mulcher on a flat surface, in a place dry and protected from exposition to the elements, possibly with storage temperature between 0 and 50 °C (see section Stopping and disconnection);
- thoroughly clean the machine, removing from the rotor all residues due to tillage, in order to avoid damage from grass and stagnant water;
- inspect carefully the machine, checking for worn and/or damaged parts. Perform immediately all repairs and/or replacements needed, in order to make the machine ready for restarting;
- in case of abrasion of painted surfaces, provide restoring the surface protection through touchup paint to prevent rust;
- make sure the safety decals are in their original positions, intact and legible. When required, replace the decals immediately;
- lubricate properly all grease points and restore the oil levels as indicated in the Maintenance section. Use protective oil to coat the exposed mechanical components and to protect them against rust.

8. SCRAPPING

In case of scrapping, the machine must be disposed in appropriate and authorized sites, according to local legislation.
Before scrapping, separate plastic parts from rubber parts, aluminum, steel, etc.
Recover and dispose any exhausted oils to authorized centers for oil collecting.

9.TROUBLESHOOTING

PROBLEM	POSSIBLE CAUSE	POSSIBLE SOLUTION
Oil leaking from gearbox/ transmission case	• Gearbox overfilled • Loose filling/drain/level plug • Damaged breather plug • Damaged seals	• Drain to proper level • Replace breather plug • Tighten filling/drain/level plug • Replace seals
Shredding not uniform	• Worn blades/hammers • Roller/wheels set in wrong way • Debris wrapped on rotor • Dirty shredding room	• Replace blades/hammers • Set the roller/wheels correctly • Reduce the ground speed • Clean the shredding room
Gearbox overheating	• Low oil level • Material difficult to be shredded	• Add oil • Reduce the ground speed
Blades/hammers wear frequently	• Hard soil • Cutting height too low	• Check the soil in advance • Increase the cutting height
Mulcher noise and vibration noticeable and constant	• Unbalanced roller • Worn bearings • Blades/hammers worn, • damaged or missing	• Balance the roller in authorized shop • Replace bearings • Replace blades/hammers

10. TORQUE VALUES TABLE

Check frequently Mulcher hardware to make sure that screws and bolts are tightened according to torque values listed in following table:

	8.8 GRADE	**10.9 GRADE**
BOLT SIZE (METRIC)	Nm	Nm
M6	10-11	14-15
M8	25-27	34-36
M10	51-54	69-73
M12	91-97	122-129
M14	137-147	185-196
M16	224-240	302-320
M18	300-321	403-428
M20	440-472	593-630

11. WARRANTY

M/s. Tirth Agro Technology Pvt. Ltd. offer the following warranty to the purchaser of COSMO BULLY equipment mentioned herein above subject to the conditions set out herein after provided the COSMO-SHAKTIMAN equipment shall be in the possession of and used by such purchaser from the date of delivery.

M/s. Tirth Agro Technology Pvt. Ltd. Warrants its products for a period of twelve (12) months from date of delivery, for manufacturing or material defects only. Failed part will be replaced at its authorized dealers only and any part component there of that shall be examined by them, shall disclose if to be defective. This warranty shall not apply to equipment or parts that have been subject to negligence, or accident, or not maintained as per company instructions specified in operator manual or that have been altered or repaired or used with non-genuine parts or abused or due to contaminated oil or used in not recommended application.

Warranty Terms & Conditions:

1) The purchaser of COSMO BULLY equipment should strictly follow the instruction given in the instruction manual provided by the company along with the COSMO BULLY equipment at the time of delivery. Changes if any, resulting in improper usage will not be covered by the warranty. This warranty will automatically terminate on the expiry of warranty period of Six months even the COSMO BULLY equipment may not be in use for any time during the warranty period for any reason whatsoever including any technical reasons and time taken for such repairs/replacement of parts, and in transit, whether under this warranty or otherwise shall not be excluded from the warranty period.
2) All wear and tear items like bearings, chains, sprockets, oil seals, tines, blades, rubber parts and gaskets are not covered under warranty.
3) All items with normal wear or failure due to normal wear will not be covered under warranty.
4) While the company or authorized dealers will make every effort to carry out repairs/replacement of parts under this warranty as soon as possible. It is expressly made clear that the company shall not be liable to do within any specific period of time.
   In the event of repairs/replacement of any parts, this warranty will thereafter continue to remain in force only for the unexpired period of warranty.
5) It is entirely left to company discretion to repair/replacement of parts at the site of delivery or at the authorized service points of its dealers. The defective parts which has/have been agreed to be replaced, should be returned to the company without any further claim.

6) The warranty shall not cover any consequential or resulting liability, damage or loss arising directly or indirectly out of any defect in the COSMO BULLY equipment. This warranty shall be strictly limited to repairs and replacement of the defective parts specified in the warranty, and does not cover any reimbursement of labour charges for any repairs so earned out at dealer/client end.

7) This warranty shall not be extended in any case of replacement or return of the COSMO-SHAKTIMAN equipment as a whole. Only failed parts will be covered under warranty.

8) The purchasers of COSMO BULLY equipment will itself fully responsible for model/variant selection.

9) This warranty does not cover for statutory duties and taxes like excise, service tax or CST or VAT or State sales tax and octroi and any other local taxes payable on any of the parts which the company may supply or repairs free of cost during the warranty period.

10) This warranty also does not cover the cost of packaging, to and from freight and transportation charges etc., on the defective COSMO BULLY equipment or other parts of the COSMO-SHAKTIMAN equipment sent to company's works in Rajkot or to the authorized service station.

11) Warranty becomes void if:

a) The COSMO BULLY equipment has not been delivered, assembled, started and put into operation by the company or its authorized representative.

b) The dully filled delivery certificate is not in our possession within 15 days from the date of delivery.

c) The COSMO BULLY equipment or any parts thereof is subjected to neglect, fire, floods or other acts of God or if in the company's opinion any damage has caused to the COSMO- SHAKTIMAN equipment during transportation.

d) The original serial number is removed, obliterated or altered from the unit.

e) Any attempt is made to have the repairs executed by a person or persons, other than the company or its authorized representative.

f) Any defect is not informed immediately to the company or its authorized representative, any alteration in warranty card is made.

g) Whenever the user or anyone else on his behalf applies equipment to the tractor or to prime mover that has not been expressly approved by the manufacturer or not suitable to the equipment.

12) a) Any changes in the location of the COSMO BULLY equipment or in the/its ownership thereof during the warranty period must be intimated in writing to the company or its authorized dealer within ten days before the change. Failure to do so will absolve the company from the obligation under this warranty.

b) Further, in the case of shifting for the continuation of the Warranty, the COSMO BULLY equipment has to be inspected by the company or its authorized representative before shifting from the original location and before using it at the new location. The inspection free levied by the company or its authorized representative as well as the cost of rectification of any damage in transit, detected in the above inspection, shall be borne by the purchaser/owner, if at the time of restarting, the COSMO BULLY equipment is found to be in working order, this warranty shall continue to be in force for the remaining period of the warranty.

c) Damage to the COSMO BULLY equipment or any part thereof caused during shifting or transportation is not covered by this warranty

13) None of the company representative or authorized dealer is authorized to alter/amend any terms and conditions of this warranty policy. Only the management of the company is authorized to do so. The decision of the company will be final and binding to the purchaser.

14) This warranty policy shall be governed by and construed in accordance with the laws of India and the courts in Rajkot shall have exclusive jurisdiction.

15) This warranty is given in lieu of all other guarantees and condition expressed or implied by law or by the any person purporting to act on behalf of the company and excludes every condition, warranty or guarantee not herein expressly set out.

Note: The parts/material that are not covered by this warranty are as follows:

1) Blades,
2) Universal joint cross,
3) Paint,
4) Bearings,
5) Rubber parts,
6) Gaskets,
7) Fasteners,
8) Fabrication,
9) Chains & sprockets,
10) Tines

12. SPARE PARTS

All repairs and replacements on the machine must be performed only by using original spare parts, which must be obtained from the Manufacturer or your Dealer.
This section contains the information needed to identify the parts of SFM Mulcher that may be ordered to Manufacturer.

When request spare parts to Manufacturer, always give following indications:

- type of machine;
- Mulcher serial number;
- description and p/number of the spare parts;
- quantities.

NOTE
For identification of p/numbers and description of safety decals refer to the Section Safety labels.

For identification of p/numbers and description of PTO driveline parts, refer to the manual of the driveshaft Manufacturer.

The Manufacturer reserves the right to substitute a required part with an equivalent part, if applicable.

13. “EC” DECLARATION OF CONFORMITY

In accordance with the EC Machinery Directive 2006/42/EC

Tirth Agro Technology Pvt. Ltd.
(An ISO 9001:2008Certified Company)
National Highway – 27, Nr. Bharudi Toll Plaza,
Gondal Road At.: Bhunava – 360311 Ta. Gondal,
Dist.: Rajkot. State: Gujarat- INDIA.
Phone: + 91 (2827) 270457
e-mail: info@shaktimanagro.com

hereby declares that the machine:

Type: **COSMO – BULLY Flail Mulcher**
Model: **SFM - Series**

Satisfies the basic safety and health requirements established by European Directive 2006/42/EC.

Harmonized standards used:

EN ISO 12100
Safety of machinery - General principles for design - Risk assessment and risk reduction
EN ISO 4254-1
Agricultural machinery - Safety - Part 1: General requirements
EN ISO 4254-12
Agricultural machinery -- Safety -- Part 12: Rotary disc and drum mowers and flail mowers
EN ISO 17101-2
Agricultural machinery -- Safety -- Part 2: Thrown objects testing of flail mowers.

Other technical standard used:

ISO 11684
Tractors, machinery for agriculture and forestry, powered lawn and garden equipment - Safety signs and hazard pictorials - General principles

Rajkot,
Ashwin Gohil / Hasmukh Gohil
Chairman / Managing Director

NOTES:

MULCHER

SFM SERIES

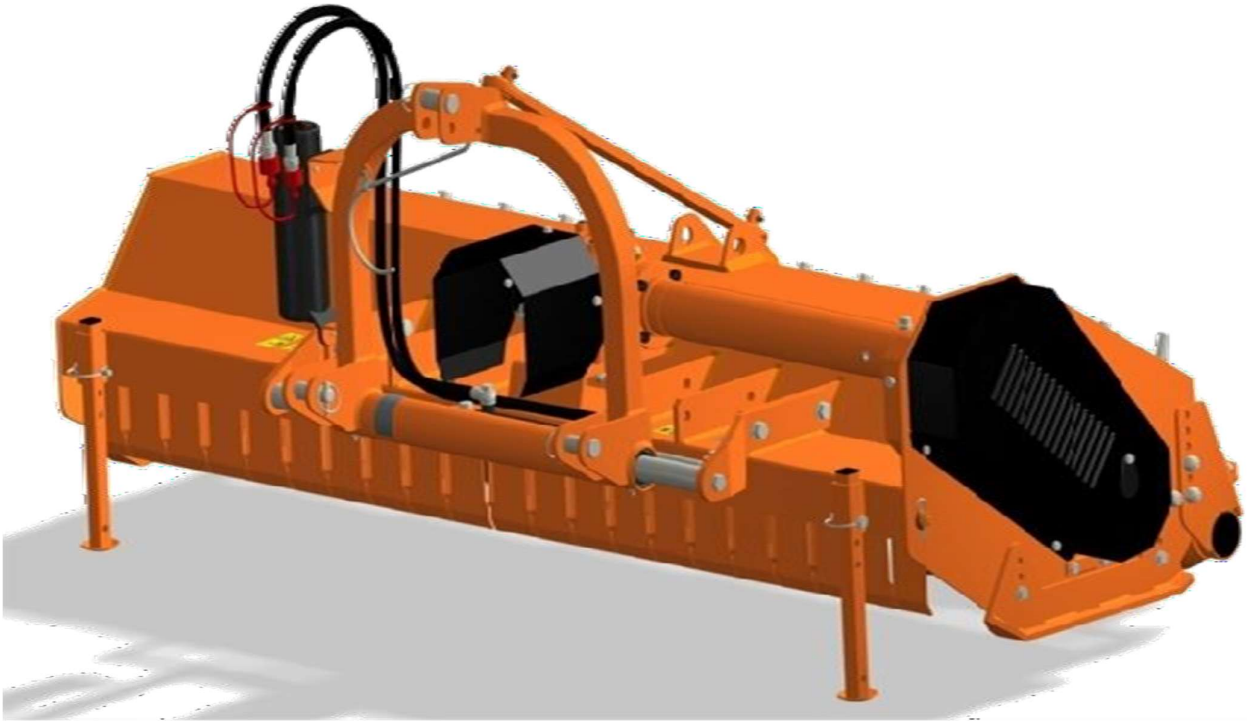

PARTS MANUAL

Tirth Agro Technology.
ISO 9001:2015 & CE Certified Company

PM2211-21EN-003_JUL_19

INDEX

Page No.	Description	Revision Date
1.1	MAIN FRAME & ROTOR ASSEMBLY PARTS	PM2211-21EN-003_REV_000_JUL_19
1.2	MAIN FRAME & ROTOR ASSEMBLY PARTS	PM2211-21EN-003_REV_000_JUL_19
2.1	TRANSMISSION AND SKID PARTS	PM2211-21EN-003_REV_000_JUL_19
2.2	TRANSMISSION AND SKID PARTS	PM2211-21EN-003_REV_000_JUL_19
3.1	GEAR BOX ASSEMBLY PARTS	PM2211-21EN-003_REV_000_JUL_19
3.2	GEAR BOX ASSEMBLY PARTS	PM2211-21EN-003_REV_000_JUL_19
4.1	3 POINT MAST SIDE SHIFT ASSEMBLY- PARTS	PM2211-21EN-003_REV_000_JUL_19
4.2	3 POINT MAST SIDE SHIFT ASSEMBLY- PARTS	PM2211-21EN-003_REV_000_JUL_19
5.1	3 POINT MAST ASSEMBLY (SIDE SHIFT & FIX TYPE)	PM2211-21EN-003_REV_000_JUL_19
5.2	3 POINT MAST ASSEMBLY (SIDE SHIFT & FIX TYPE)	PM2211-21EN-003_REV_000_JUL_19
6.1	SHIELD, FRONT PLATES, PARKING STAND	PM2211-21EN-003_REV_000_JUL_19
6.2	SHIELD, FRONT PLATES, PARKING STAND	PM2211-21EN-003_REV_000_JUL_19
7.1	KIT - REAR COVER STANDARD	PM2211-21EN-003_REV_000_JUL_19
7.2	KIT - REAR COVER STANDARD	PM2211-21EN-003_REV_000_JUL_19
8.1	KIT - REAR ROLLER	PM2211-21EN-003_REV_000_JUL_19
8.2	KIT - REAR ROLLER	PM2211-21EN-003_REV_000_JUL_19
9.1	KIT - REAR COVER WITH RACKS	PM2211-21EN-003_REV_000_JUL_19
9.2	KIT - REAR COVER WITH RACKS	PM2211-21EN-003_REV_000_JUL_19

MAIN FRAME & ROTOR ASSEMBLY PARTS

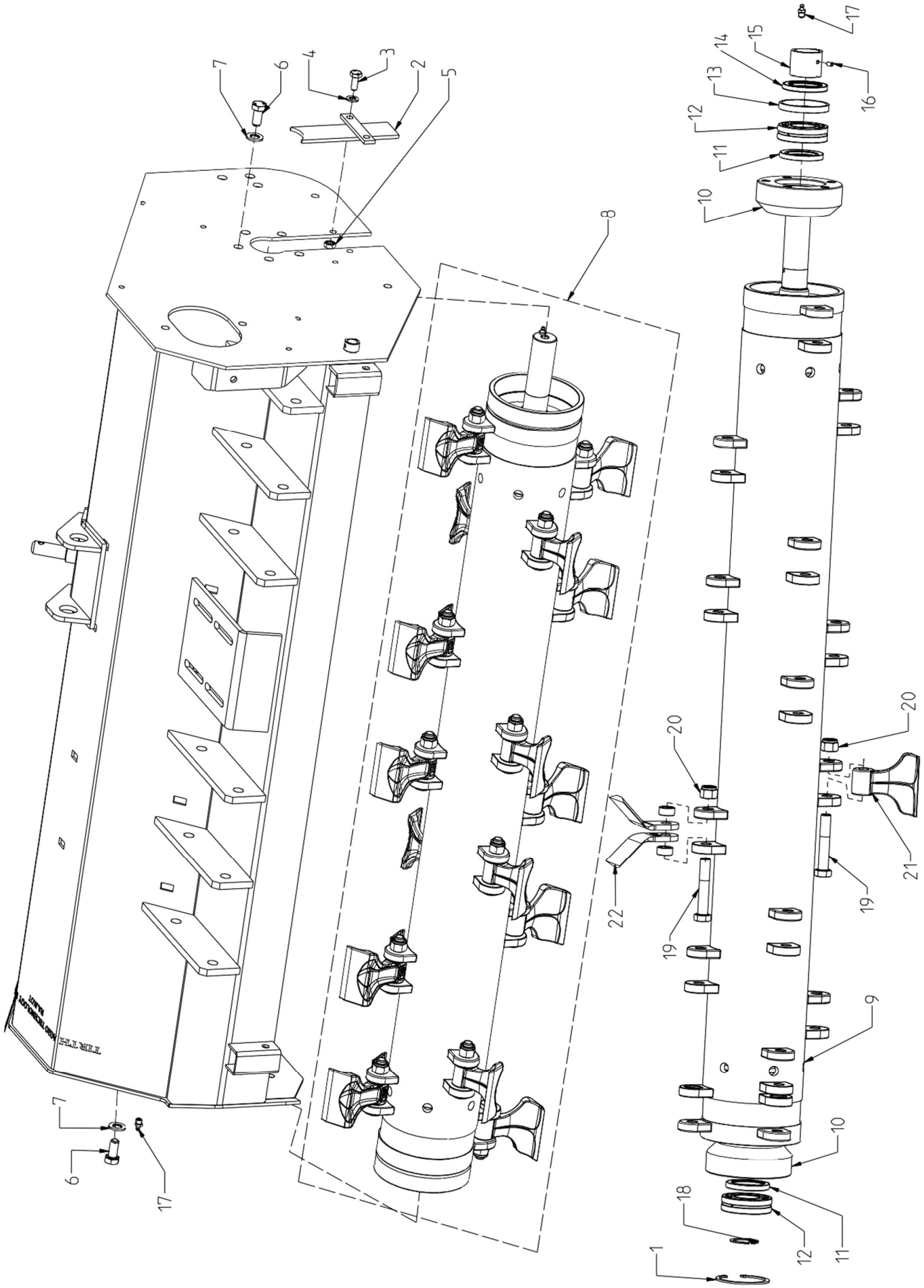

MAIN FRAME & ROTOR ASSEMBLY PARTS			
Sr No.	Part no	Description	Qty.
1	1130	CIRCLIP INTERNAL 80MM	1
2	17142	CLOSING PLATE, WELDMENT (SFM)	1
3	17270	HEX BOLT M10X1.50X25(DIN933)(8.8)(ZP)	As per Req.
4	8078	PLAIN WASHER 10MM (BS-4320)	As per Req.
5	17272	HEX NUT M10X1.50(DIN 934)(8)(ZP)	As per Req.
6	17280	HEX BOLT M14X2.00X30(DIN933)(8.8)(ZP)	As per Req.
7	1272	PLAIN WASHER 14MM (BS-4320)	As per Req.
8	17402	ROTOR ASSEMBLY 0.85M (Y- BLADE)(SFM)	1
	17401	ROTOR ASSEMBLY 1.00M (Y- BLADE)(SFM)	
	17400	ROTOR ASSEMBLY 1.15M (Y- BLADE)(SFM)	
	17399	ROTOR ASSEMBLY 1.30M (Y- BLADE)(SFM)	
	17247	ROTOR ASSEMBLY 1.45M (Y-BLADE) (SFM)	
	17248	ROTOR ASSEMBLY 1.60M (Y-BLADE) (SFM)	
	17249	ROTOR ASSEMBLY 1.75M (Y-BLADE) (SFM)	
	17250	ROTOR ASSEMBLY 2.05M (Y-BLADE) (SFM)	
	17251	ROTOR ASSEMBLY 2.20M (Y-BLADE) (SFM)	
	17386	ROTOR ASSEMBLY 0.85M (HAMMER BLADE)(SFM)	
	17342	ROTOR ASSEMBLY 1.00M (HAMMER BLADE)(SFM)	
	17341	ROTOR ASSEMBLY 1.15M (HAMMER BLADE)(SFM)	
	17340	ROTOR ASSEMBLY 1.30M (HAMMER BLADE)(SFM)	
	17252	ROTOR ASSEMBLY 1.45M (HAMMER BLADE)(SFM)	
	17253	ROTOR ASSEMBLY 1.60M (HAMMER BLADE)(SFM)	
	17254	ROTOR ASSEMBLY 1.75M (HAMMER BLADE)(SFM)	
	17255	ROTOR ASSEMBLY 2.05M (HAMMER BLADE)(SFM)	
	17256	ROTOR ASSEMBLY 2.20M (HAMMER BLADE)(SFM)	
9	17385	ROTOR WELDMENT WITH EXTENSION, 85 (SFM)	1
	17339	ROTOR WELDMENT WITH EXTENSION, 100 (SFM)	
	17338	ROTOR WELDMENT WITH EXTENSION, 115 (SFM)	
	17337	ROTOR WELDMENT WITH EXTENSION, 130 (SFM)	
	17681	ROTOR WELDMENT WITH EXTENSION, 145 (SFM)	
	17682	ROTOR WELDMENT WITH EXTENSION, 160 (SFM)	
	17683	ROTOR WELDMENT WITH EXTENSION, 175 (SFM)	
	17684	ROTOR WELDMENT WITH EXTENSION, 205 (SFM)	
	17685	ROTOR WELDMENT WITH EXTENSION, 220 (SFM)	
10	17149	ROTOR HUB, TRANSMISSION SIDE (SFM)	2
11	17150	OIL SEAL 47 X 70 X 8	2
12	17151	BEARING 22208 (SKF)	2
13	17152	RING, ROTARY SEAL	1
14	17153	OIL SEAL 50 X 72 X 8	1
15	17154	SPACER, DRIVEN PULLEY (SFM)	1
16	12090	GRUB SCREW M6 X 1 X 10	As per Req.
17	20272	GREASE NIPPLE M10 X 1.50(STRAIGHT)	2
18	8027	CIRCLIP EXTERNAL 40MM	1
19	17279	HEX BOLT M16X2.00X90(IS1364-1)(10.9)(ZP)	As per Req.
20	1231	NYLOCK NUT M16X2.0 (DIN-982)	As per Req.
21	17398	SET OF HAMMER BLADE(0.860), 0.85M (SFM)	1
	17383	SET OF HAMMER BLADE(0.860), 1.00M (SFM)	
	17382	SET OF HAMMER BLADE(0.860), 1.15M (SFM)	
	17381	SET OF HAMMER BLADE(0.860), 1.30M (SFM)	
	17309	SET OF HAMMER BLADE(0.860), 1.45M (SFM)	
	17310	SET OF HAMMER BLADE(0.860), 1.60M (SFM)	
	17311	SET OF HAMMER BLADE(0.860), 1.75M (SFM)	
	17312	SET OF HAMMER BLADE(0.860), 2.05M (SFM)	
	17313	SET OF HAMMER BLADE(0.860), 2.20M (SFM)	
22	17409	SET OF Y BLADE FOR 0.85M (SFM)	1
	17408	SET OF Y BLADE FOR 1.00M (SFM)	
	17407	SET OF Y BLADE FOR 1.15M (SFM)	
	17406	SET OF Y BLADE FOR 1.30M (SFM)	
	17412	SET OF Y BLADE FOR 1.45M (SFM)	
	17413	SET OF Y BLADE FOR 1.60M (SFM)	
	17414	SET OF Y BLADE FOR 1.75M (SFM)	
	17415	SET OF Y BLADE FOR 2.05M (SFM)	
	17416	SET OF Y BLADE FOR 2.20M (SFM)	

TRANSMISSION AND SKID PARTS

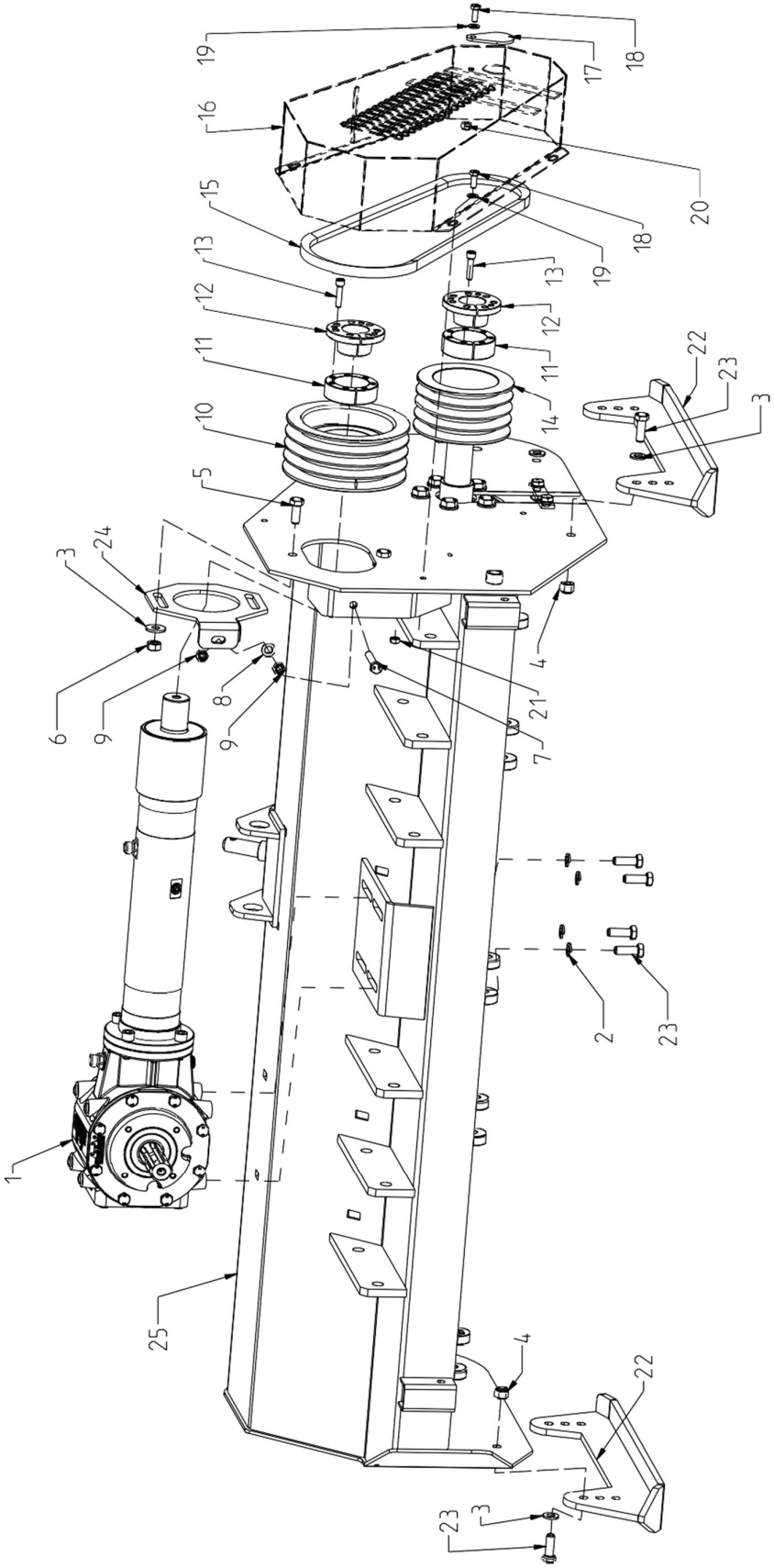

TRANSMISSION AND SKID PARTS			
Sr No.	Part no	Description	Qty.
1	17395	GEAR BOX ASS. (270MM) 540 RPM (SFM-085)-NEW	1
	17374	GEAR BOX ASS. (345MM) 540 RPM (SFM-100)-NEW	
	17373	GEAR BOX ASS. (420MM) 540 RPM (SFM-115)-NEW	
	17371	GEAR BOX ASS. (445MM) 540 RPM (SFM-130)-NEW	
	17370	GEAR BOX ASS. (470MM) 540 RPM (SFM-145)-NEW	
	17372	GEAR BOX ASS. (495MM) 540 RPM (SFM-160)-NEW	
	17369	GEAR BOX ASS. (545MM) 540 RPM (SFM-175)-NEW	
	17368	GEAR BOX ASS. (695MM) 540 RPM (SFM-205)-NEW	
	17367	GEAR BOX ASS. (770MM) 540 RPM (SFM-220)-NEW	
2	14362	SPRING WASHER M12.00(IS 3063)(ZP)	As per Req.
3	17269	PLAIN WASHER 30 X 12 X 3	As per Req.
4	1209	NYLOCK NUT M12X1.75 (DIN-982)	As per Req.
5	17275	HEX BOLT M12X1.75X30(DIN933)(8.8)(ZP)	As per Req.
6	17273	HEX NUT M12X1.75(DIN 934)(8)(ZP)	As per Req.
7	17281	HEX BOLT M10X1.50X60(DIN933)(8.8)(ZP)	As per Req.
8	8078	PLAIN WASHER 10MM (BS-4320)	As per Req.
9	17272	HEX NUT M10X1.50(DIN 934)(8)(ZP)	As per Req.
10	17161	SPB TYPE PULLEY PCD=180, 4 GROOVE (SFM)	1
	17405	SPB TYPE PULLEY PCD=180, 3 GROOVE (SFM)	
11	17037	CLAMP OUTER (SRM)	2
12	17036	CLAMP INNER (SRM)	2
13	17035	ALLEN BOLT M8 X 1.25 X 35 (FT)(12.9)	As per Req.
14	17162	SPB TYPE PULLEY PCD=140, 4 GROOVE (SFM)	1
	17404	SPB TYPE PULLEY PCD=140, 3 GROOVE (SFM)	
15	17698	SET OF V BELT BX47 (CONTITECH)(4 NOS)	1
	17699	SET OF V BELT BX47 (CONTITECH)(3 NOS)	
16	17164	GUARD, BELT TRASMISSION (SFM)	1
	17403	GUARD, BELT TRASMISSION 3-GROOVE (SFM)	
17	17165	PLATE, PROTECTION GREASE NIPPLE (SFM)	1
18	8040	HEX BOLT M8X1.25X20(IS1364-2)(8.8)(ZP)	As per Req.
19	8064	PLAIN WASHER 8MM (BS-4320)	As per Req.
20	1297	NYLOCK NUT M8X1.25 (DIN-982)	As per Req.
21	8181	HEX NUT M8X1.25(IS 1363)(8)(ZP)	As per Req.
22	35063	SKID WELDMENT NEW (SFM)	2
23	17274	HEX BOLT M12X1.75X35(DIN933)(8.8)(ZP)	As per Req.
24	17300	PLATE WELDMENT, BELT TENSIONING (SFM)	1
25	17384	FRAME WELDMENT, FLAIL MOWER - 85 (SFM)	1
	17336	FRAME WELDMENT, FLAIL MOWER 100 (SFM)	
	17335	FRAME WELDMENT, FLAIL MOWER 115 (SFM)	
	17334	FRAME WELDMENT, FLAIL MOWER 130 (SFM)	
	17137	FRAME WELDMENT, FLAIL MOWER 145 (SFM)	
	17138	FRAME WELDMENT, FLAIL MOWER 160 (SFM)	
	17139	FRAME WELDMENT, FLAIL MOWER 175 (SFM)	
	17140	FRAME WELDMENT, FLAIL MOWER 205 (SFM)	
	17141	FRAME WELDMENT, FLAIL MOWER 220 (SFM)	

GEAR BOX ASSEMBLY PARTS

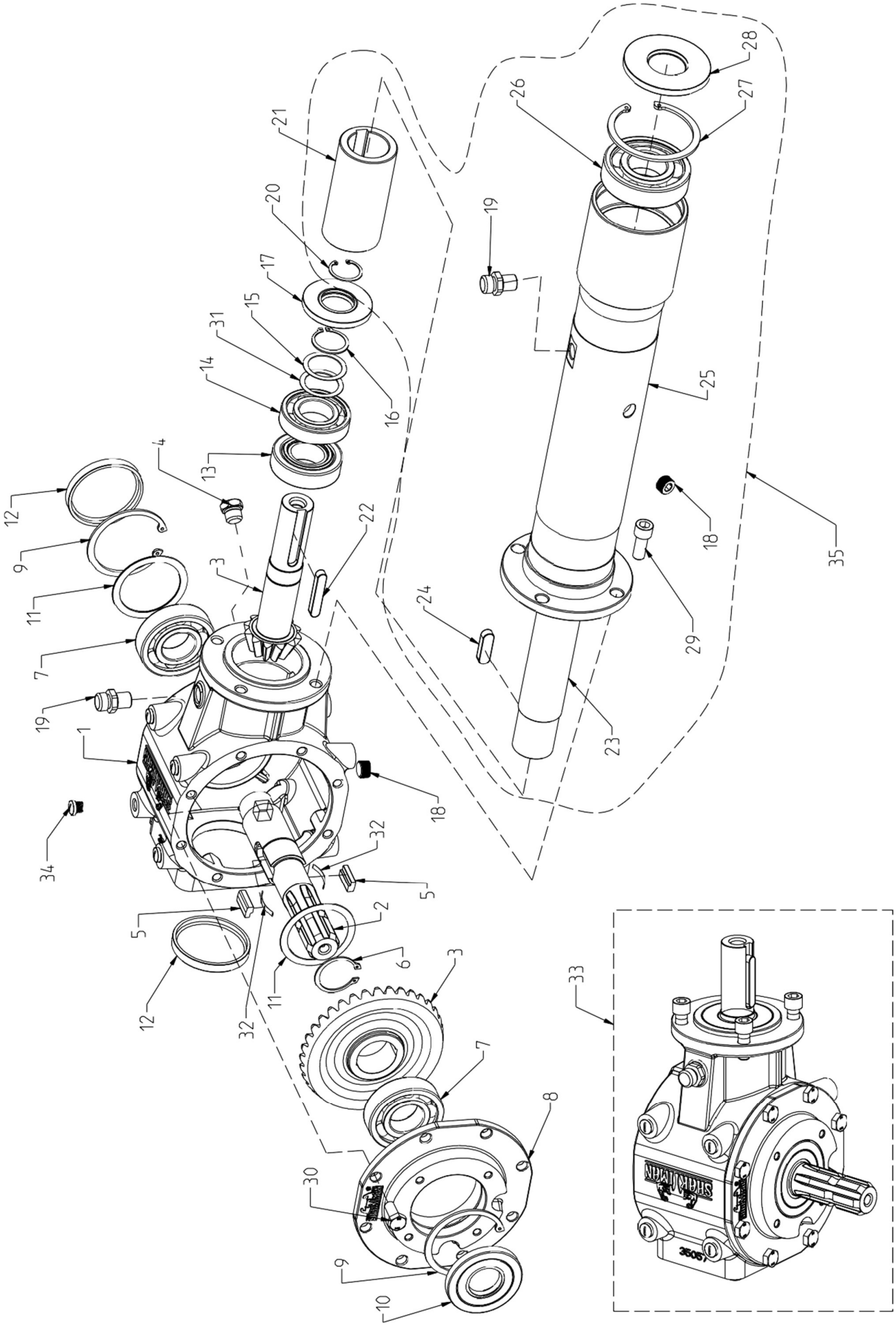

GEAR BOX ASSEMBLY PARTS			
Sr No.	**Part no**	**Description**	**Qty.**
1	17001	GEAR BOX 540 RPM (SRM) 50HP	1
2	17244	INPUT SHAFT - FREE WHEEL	1
3	35032	CROWN T36, PINION T12 PAIR M-4.35 (BMF)	1
4	3419	3/8 BSP BOLT WITH O-RING	1
5	17230	GEAR B0X RATCHET 28MM(NEW)	2
6	1044	CIRCLIP EXTERNAL 42MM	1
7	1131	BEARING 6307	2
8	35058	GEAR BOX FLANGE 540 RPM 50HP-NEW (SRM)	1
9	1130	CIRCLIP INTERNAL 80MM	2
10	17329	OIL SEAL 35 X 80 X 10 (NEW)	1
11	17167	SHIMS (DIA 80 X 65)(0.50MM)	4
12	17633	OIL SEAL 80 X 10 (NEW)	2
13	17054	BEARING 32207B	1
14	10143	BEARING 6207	1
15	1424	SHIMS (DIA 44.5 X 35.7)(0.50MM)	2
16	6024	CIRCLIP EXTERNAL 35MM	1
17	14309	OIL SEAL 35 X 72 X 8 (SPECIAL)	1
18	17258	CONICAL SPECIAL HEAD BOLT 3/8" BSP	2
19	14311	AIR BREATHER 3/8" BSP (1GTSSR210)	2
20	17083	CIRCLIP INTERNAL 32MM	1
21	17025	SHAFT CONNECTOR (SRM)	1
22	11077	PARALLEL KEY 10 X 8 X 56	1
23	17393	JACK SHAFT 260MM (SFM-085)	1
	17363	JACK SHAFT 335MM (SFM-100)	
	17362	JACK SHAFT 410MM (SFM-115)	
	17170	JACK SHAFT 445MM (SFM-130)	
	17171	JACK SHAFT 470MM (SFM-145)	
	17361	JACK SHAFT 485MM (SFM-160)	
	17172	JACK SHAFT 545MM (SFM-175)	
	17173	JACK SHAFT 695MM (SFM-205)	
	17174	JACK SHAFT 770MM (SFM-220)	
24	11076	PARALLEL KEY 12 X 8 X 40	1
25	17394	JACK SHAFT HOUSING COMP 270MM (SFM-085)	1
	17366	JACK SHAFT HOUSING COMP 345MM (SFM-100)	
	17365	JACK SHAFT HOUSING COMP 420MM (SFM-115)	
	17328	JACK SHAFT HOUSING COMP 445MM (SFM-130)(NEW)	
	17327	JACK SHAFT HOUSING COMP 470MM (SFM-145)(NEW)	
	17364	JACK SHAFT HOUSING COMP 495MM (SFM-160)	
	17326	JACK SHAFT HOUSING COMP 545MM (SFM-175)(NEW)	
	17325	JACK SHAFT HOUSING COMP 695MM (SFM-205)(NEW)	
	17324	JACK SHAFT HOUSING COMP 770MM (SFM-220)(NEW)	
26	8036	BEARING 6308	1
27	3027	CIRCLIP INTERNAL 90MM	1
28	17026	OIL SEAL 90 X 40 X 8 (NEW)	1
29	14367	ALLEN BOLT M12X1.75X30-FT12.9DIN912-ZINC	As per Req.
30	17270	HEX BOLT M10X1.50X25(DIN933)(8.8)(ZP)	As per Req.
31	1425	SHIMS (DIA 45 X 35)(1.00MM)	1
32	17076	LEAF SPRING (SRM)	2
33	17677	GEAR BOX ASSEMBLY 50HP (SRM)	1
34	17675	PLASTIC CAP M12 X 1.75	8
35	17786	JACK SHAFT - HOUSING ASS 260MM (SFM-085)	1
	17785	JACK SHAFT - HOUSING ASS 335MM (SFM-100)	
	17784	JACK SHAFT - HOUSING ASS 410MM (SFM-115)	
	17783	JACK SHAFT - HOUSING ASS 445MM (SFM-130)	
	17782	JACK SHAFT - HOUSING ASS 470MM (SFM-145)	
	17781	JACK SHAFT - HOUSING ASS 485MM (SFM-160)	
	17780	JACK SHAFT - HOUSING ASS 545MM (SFM-175)	
	17779	JACK SHAFT - HOUSING ASS 695MM (SFM-205)	
	17778	JACK SHAFT - HOUSING ASS 770MM (SFM-220)	

3 POINT MAST SIDE SHIFT ASSEMBLY- PARTS

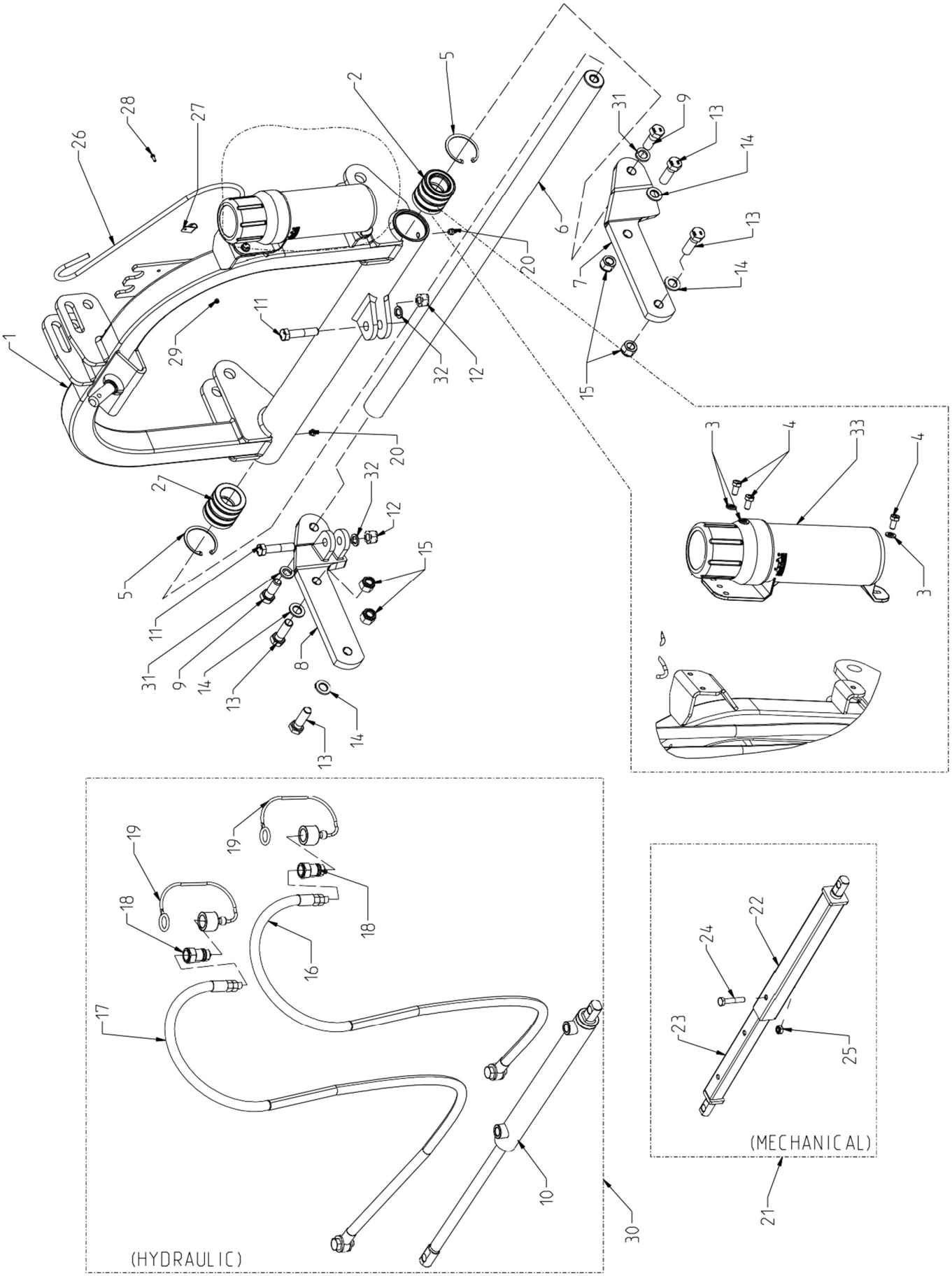

3 POINT MAST SIDE SHIFT ASSEMBLY- PARTS			
Sr No.	Part no	Description	Qty.
1	17180	MAST WELDMENT, HYDRAULIC (SFM)	1
2	17664	NYLON BUSH ASSEMBLY (40 X 62.5) (SFM)	2
3	8064	PLAIN WASHER 8MM (BS-4320)	As per Req.
4	8190	HEX BOLT M8X1.25X15(IS1364-2)(8.8)(ZP)	As per Req.
5	8120	CIRCLIP INTERNAL 62mm	2
6	17183	GUIDE BAR (L=1080MM) (SFM)	1
7	17184	BRACKET, LH (SFM)	1
8	17185	BRACKET WELDMENT (SFM)	1
9	7039	HEX BOLT M16X1.50X50(IS1364-1)(10.9)(ZP)	As per Req.
10	17578	HYDRAULIC JACK (STROKE-300) NEW	1
11	17417	HEX BOLT M14X1.50X65(DIN931)(8.8)(ZP)	As per Req.
12	1302	NYLOCK NUT M14X1.50 (DIN-982)	As per Req.
13	18446	HEX BOLT M16X2.00X55(IS1364-1)(8.8)(ZP)	As per Req.
14	1078	PLAIN WASHER 16MM (BS-4320)	As per Req.
15	1231	NYLOCK NUT M16X2.0 (DIN-982)	As per Req.
16	17188	HYD PIPE 3/8R1 3/8BANJO,1/2 BSPM,L2.0M-G	1
17	17189	HYD PIPE 3/8R1 3/8BANJO,1/2 BSPM,L2.4M-G	1
18	8290	QUICK COUPLING 1/2" MALE	2
19	18269	QRC PLASTIC CAP (1/2 BSP) FEMALE	2
20	20148	GREASE NIPPLE M8 X 1.25	2
21	17266	MANUAL JACK ASSEMBLY (SFM)	1
22	17264	OUTER PIPE MANUAL JACK COMP (SFM)	1
23	17265	INNER PIPE MANUAL JACK COMP (SFM)	1
24	17301	HEX BOLT M10X1.50X55(DIN931)(8.8)(ZP)	As per Req.
25	17272	HEX NUT M10X1.50(DIN 934)(8)(ZP)	As per Req.
26	14341	DRIVELINE HOOK 320MM	1
27	23147	PLATE,HOOK HOLDING (JUMBO)	1
28	35098	HEX BOLT M4X0.75X15(IS1364-2)(8.8)(ZP)	As per Req.
29	24529	NYLOCK NUT M4 X 0.75 - SCH	As per Req.
30	17268	HYDRAULIC PARTS ASSEMBLY (SFM)	1
31	14364	SPRING WASHER M16.00(IS 3063)(ZP)	As per Req.
32	14363	SPRING WASHER M14.00(IS 3063)(ZP)	As per Req.
33	26030	MANUAL BOX COVER 1/2(SMMSD)	1

3 POINT MAST ASSEMBLY (SIDE SHIFT & FIX TYPE)

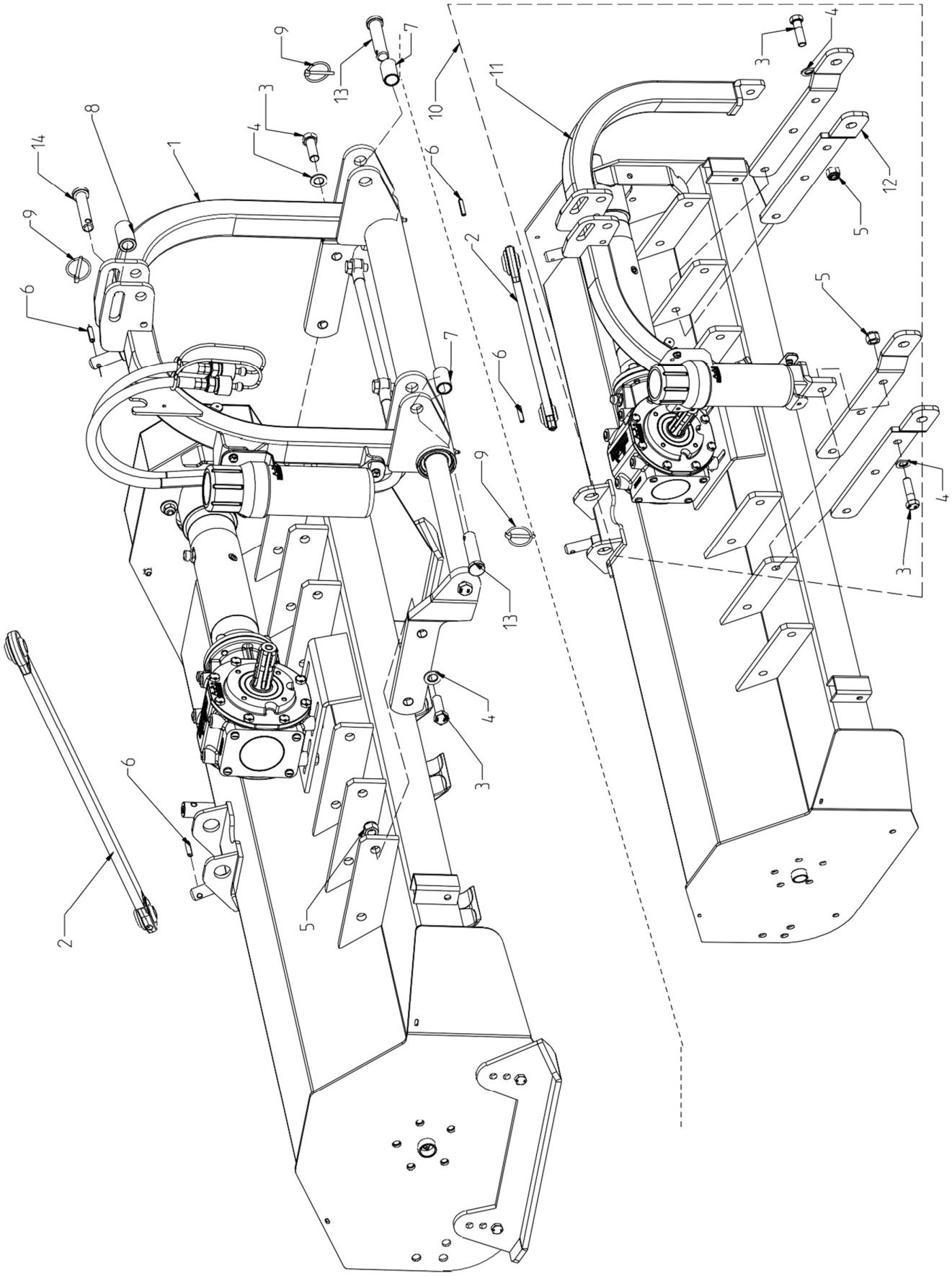

3 POINT MAST ASSEMBLY (SIDE SHIFT & FIX TYPE)			
Sr No.	Part no	Description	Qty.
1	17233	TOP MAST ASSEMBLY-HYDRAULIC (SFM)	1
2	17190	TIE-ROD WITH BALL-JOINTS (SFM)	1
3	18446	HEX BOLT M16X2.00X55(IS1364-1)(8.8)(ZP)	As per Req.
4	1078	PLAIN WASHER 16MM (BS-4320)	As per Req.
5	1231	NYLOCK NUT M16X2.0 (DIN-982)	As per Req.
6	17191	DOWEL PIN DIA 8 X 36	2
7	15069	LOWER LINK PIN BUSH (SFB)	2
8	14086	BUSH (DIA. 19.4 X 25.4 X 52 L)	1
9	8204	LINCH PIN SMALL (CHO)	3
10	17260	TOP MAST ASSEMBLY-FIX TYPE (SFM)	1
11	17234	MAST WELDMENT, FIXED TYPE (SFM)	1
12	17235	BRACKET-LOWER 3RD POINT ATTACHMENT (SFM)	4
13	14015	HITCH PIN BOTTOM CAT-I (DIA-22 X 99)	2
14	14037	HINCH PIN TOP CAT-I (DIA- 19 X 98)	1

SHIELD, FRONT PLATES, PARKING STAND

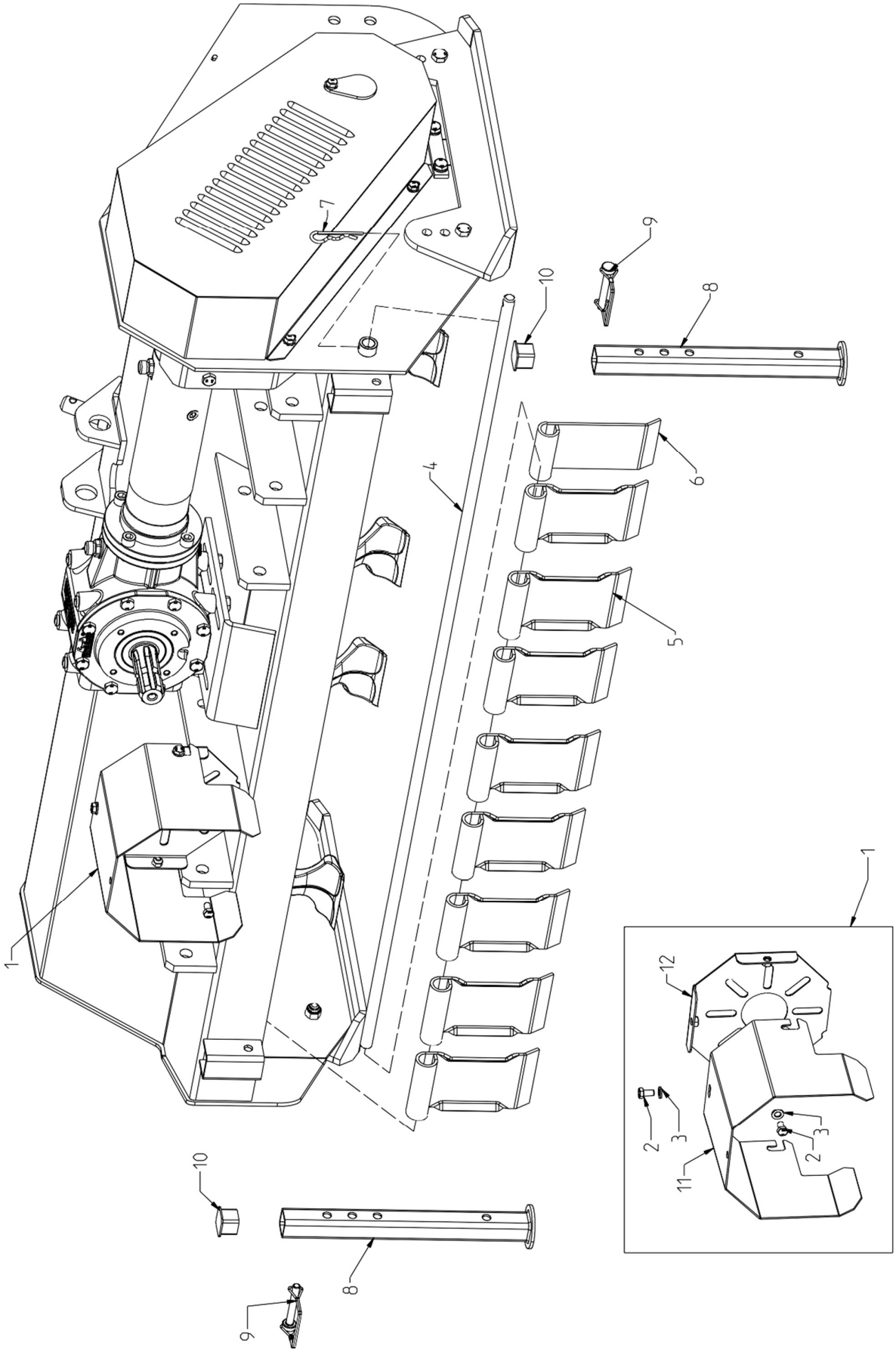

SHIELD, FRONT PLATES, PARKING STAND			
Sr No.	Part no	Description	Qty.
1	17968	PTO SHAFT GUARD ASS SMALL (BMF)	1
2	8190	HEX BOLT M8X1.25X15(IS1364-2)(8.8)(ZP)	As per Req.
3	8064	PLAIN WASHER 8MM (BS-4320)	As per Req.
4	17387	ROD, FRONT PLATES, 85 (SFM)	1
	17360	ROD, FRONT PLATES, 100 (SFM)	
	17359	ROD, FRONT PLATES, 115 (SFM)	
	17358	ROD, FRONT PLATES, 130 (SFM)	
	17192	ROD, FRONT PLATES, 145 (SFM)	
	17193	ROD, FRONT PLATES, 160 (SFM)	
	17194	ROD, FRONT PLATES, 175 (SFM)	
	17195	ROD, FRONT PLATES, 205 (SFM)	
	17196	ROD, FRONT PLATES, 220 (SFM)	
5	17197	FRONT PLATE, L=100 (SFM)(SFM-085)	8
		FRONT PLATE, L=100 (SFM)(SFM-100)	
		FRONT PLATE, L=100 (SFM)(SFM-115)	10
		FRONT PLATE, L=100 (SFM)(SFM-130)	11
		FRONT PLATE, L=100 (SFM)(SFM-145)	13
		FRONT PLATE, L=100 (SFM)(SFM-160)	14
		FRONT PLATE, L=100 (SFM)(SFM-175)	16
		FRONT PLATE, L=100 (SFM)(SFM-205)	19
		FRONT PLATE, L=100 (SFM)(SFM-220)	20
6	17198	FRONT PLATE, L=85 (SFM-085)	-
		FRONT PLATE, L=85 (SFM-100)	1
		FRONT PLATE, L=85 (SFM-115)	-
		FRONT PLATE, L=85 (SFM-130)	1
		FRONT PLATE, L=85 (SFM-145)	-
		FRONT PLATE, L=85 (SFM-160)	1
		FRONT PLATE, L=85 (SFM-175)	-
		FRONT PLATE, L=85 (SFM-205)	-
		FRONT PLATE, L=85 (SFM-220)	1
7	15055	R-CLIP WIRE DIA 4.00MM	As per Req.
8	35118	M/C STAND PIPE COMP (SFM-085)(SFM-085)	1
		M/C STAND PIPE COMP (SFM-100)(SFM-100)	2
		M/C STAND PIPE COMP (SFM-115)(SFM-115)	
		M/C STAND PIPE COMP (SFM-130)(SFM-130)	
		M/C STAND PIPE COMP (SFM-145)(SFM-145)	
		M/C STAND PIPE COMP (SFM-160)(SFM-160)	
		M/C STAND PIPE COMP (SFM-175)(SFM-175)	
		M/C STAND PIPE COMP (SFM-205)(SFM-205)	
		M/C STAND PIPE COMP (SFM-220)(SFM-220)	
9	14267	SQ. SNAPPER PIN D10 X L70(SFM-085)	1
		SQ. SNAPPER PIN D10 X L70(SFM-100)	2
		SQ. SNAPPER PIN D10 X L70(SFM-115)	
		SQ. SNAPPER PIN D10 X L70(SFM-130)	
		SQ. SNAPPER PIN D10 X L70(SFM-145)	
		SQ. SNAPPER PIN D10 X L70(SFM-160)	
		SQ. SNAPPER PIN D10 X L70(SFM-175)	
		SQ. SNAPPER PIN D10 X L70(SFM-205)	
		SQ. SNAPPER PIN D10 X L70(SFM-220)	
10	14266	SQ. PIPE PLASTIC CAP 32MM(SFM-085)	1
		SQ. PIPE PLASTIC CAP 32MM(SFM-100)	2
		SQ. PIPE PLASTIC CAP 32MM(SFM-115)	
		SQ. PIPE PLASTIC CAP 32MM(SFM-130)	
		SQ. PIPE PLASTIC CAP 32MM(SFM-145)	
		SQ. PIPE PLASTIC CAP 32MM(SFM-160)	
		SQ. PIPE PLASTIC CAP 32MM(SFM-175)	
		SQ. PIPE PLASTIC CAP 32MM(SFM-205)	
		SQ. PIPE PLASTIC CAP 32MM(SFM-220)	
11	17970	PTO SHAFT GUARD SMALL (BMF)	1
12	17969	PTO SHAFT GUARD MOUNT PLATE COMP (BMF)	1

KIT
(REAR COVER STANDARD)

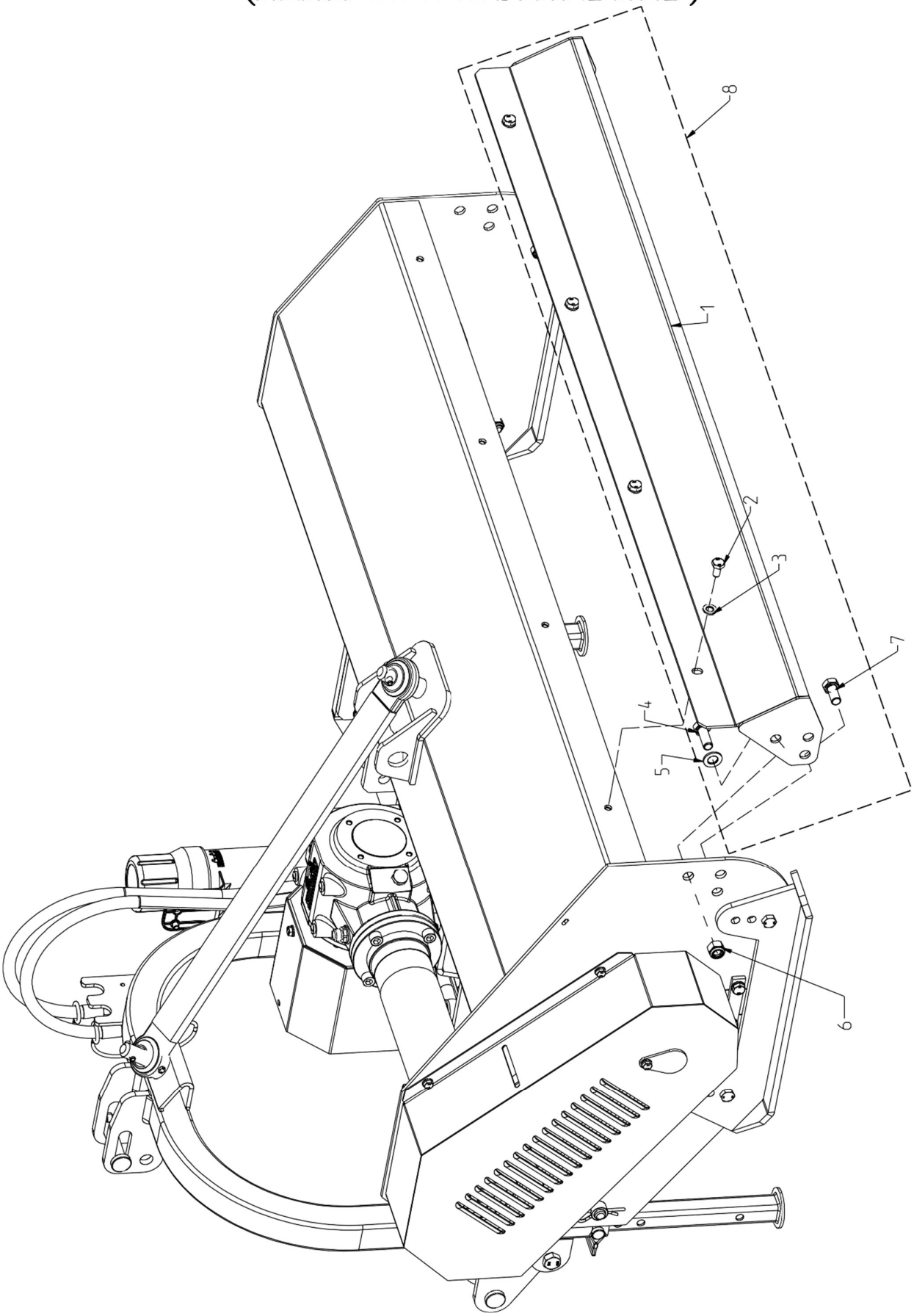

KIT - REAR COVER STANDARD			
Sr No.	Part no	Description	Qty.
1	17388	STANDARD REAR COVER WELDMENT, 85 (SFM)	1
	17345	STANDARD REAR COVER WELDMENT, 100 (SFM)	
	17344	STANDARD REAR COVER WELDMENT, 115 (SFM)	
	17343	STANDARD REAR COVER WELDMENT, 130 (SFM)	
	17199	STANDARD REAR COVER WELDMENT, 145 (SFM)	
	17200	STANDARD REAR COVER WELDMENT, 160 (SFM)	
	17201	STANDARD REAR COVER WELDMENT, 175 (SFM)	
	17202	STANDARD REAR COVER WELDMENT, 205 (SFM)	
	17203	STANDARD REAR COVER WELDMENT, 220 (SFM)	
2	17276	HEX BOLT M10X1.50X20(DIN933)(8.8)(ZP)	As per Req.
3	8078	PLAIN WASHER 10MM (BS-4320)	As per Req.
4	3339	HEX BOLT M14X1.50X45(DIN931)(8.8)(ZP)	As per Req.
5	1272	PLAIN WASHER 14MM (BS-4320)	As per Req.
6	1302	NYLOCK NUT M14X1.50 (DIN-982)	As per Req.
7	35033	HEX BOLT M14X1.50X35(DIN933)(8.8)(ZP)	As per Req.
8	17397	STANDARD REAR COVER ASSEMBLY, 85 (SFM)	1
	17380	STANDARD REAR COVER ASSEMBLY, 100(SFM)	
	17379	STANDARD REAR COVER ASSEMBLY, 115(SFM)	
	17378	STANDARD REAR COVER ASSEMBLY, 130(SFM)	
	17319	STANDARD REAR COVER ASSEMBLY, 145 (SFM)	
	17320	STANDARD REAR COVER ASSEMBLY, 160 (SFM)	
	17321	STANDARD REAR COVER ASSEMBLY, 175 (SFM)	
	17322	STANDARD REAR COVER ASSEMBLY, 205 (SFM)	
	17323	STANDARD REAR COVER ASSEMBLY, 220 (SFM)	

KIT
(REAR ROLLER)

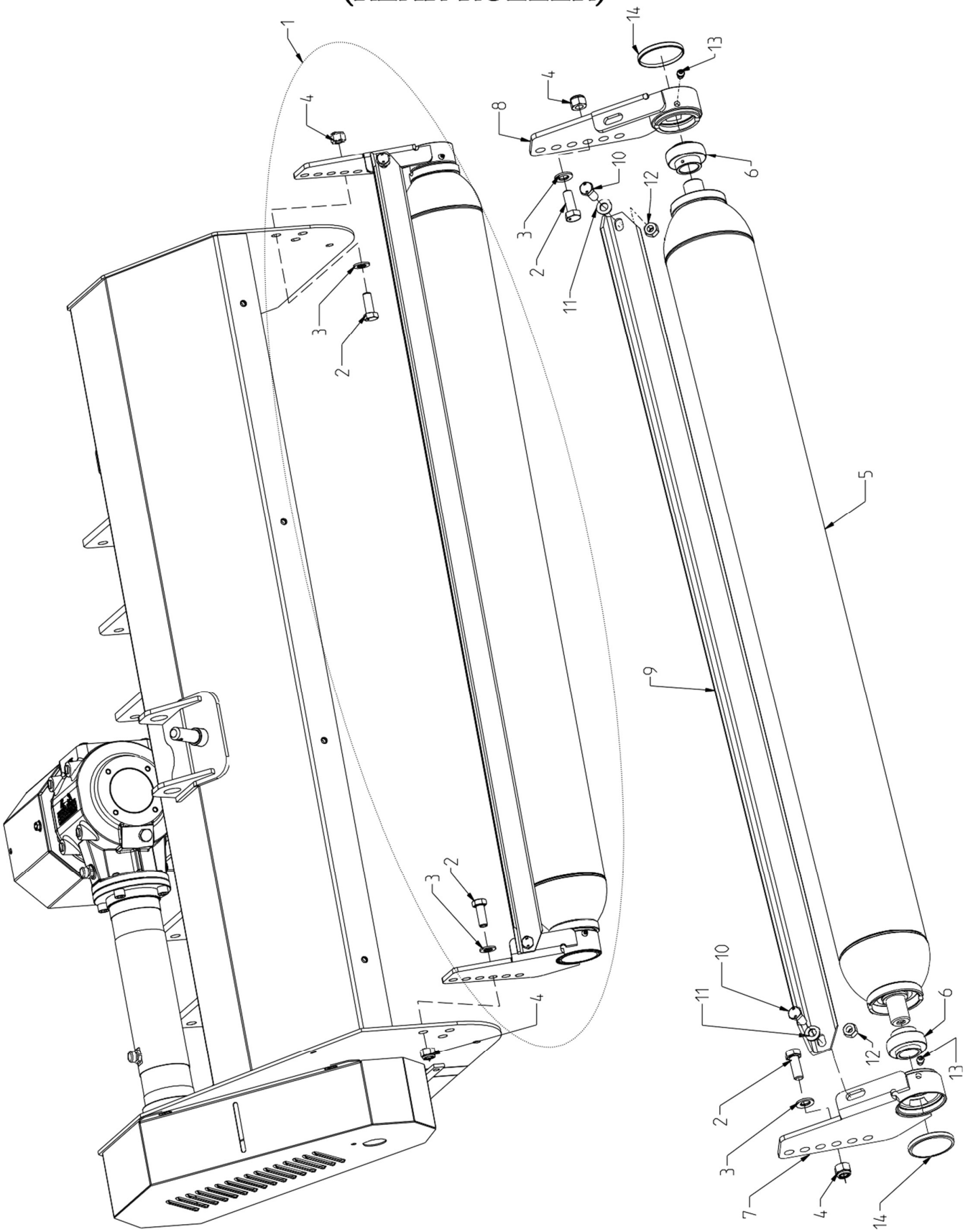

KIT - REAR ROLLER			
Sr No.	Part no	Description	Qty.
1	17392	REAR ROLLER ASSEMBLY, 85 (SFM)	1
	17357	REAR ROLLER ASSEMBLY 100 (SFM)	
	17356	REAR ROLLER ASSEMBLY 115 (SFM)	
	17355	REAR ROLLER ASSEMBLY 130 (SFM)	
	17204	REAR ROLLER ASSEMBLY 145 (SFM)	
	17205	REAR ROLLER ASSEMBLY 160 (SFM)	
	17206	REAR ROLLER ASSEMBLY 175 (SFM)	
	17207	REAR ROLLER ASSEMBLY 205 (SFM)	
	17208	REAR ROLLER ASSEMBLY 220 (SFM)	
2	3339	HEX BOLT M14X1.50X45(DIN931)(8.8)(ZP)	As per Req.
3	1272	PLAIN WASHER 14MM (BS-4320)	As per Req.
4	1302	NYLOCK NUT M14X1.50 (DIN-982)	As per Req.
5	17391	REAR ROLLER WELDMENT, 85 (SFM)	1
	17354	REAR ROLLER WELDMENT, 100 (SFM)	
	17353	REAR ROLLER WELDMENT, 115 (SFM)	
	17352	REAR ROLLER WELDMENT, 130 (SFM)	
	17209	REAR ROLLER WELDMENT, 145 (SFM)	
	17210	REAR ROLLER WELDMENT, 160 (SFM)	
	17211	REAR ROLLER WELDMENT, 175 (SFM)	
	17212	REAR ROLLER WELDMENT, 205 (SFM)	
	17213	REAR ROLLER WELDMENT, 220 (SFM)	
6	17214	BEARING-UC 206MM	2
7	17215	ROLLER MOUNT WELDMENT, LH (SFM)	1
8	17216	ROLLER MOUNT WELDMENT, RH (SFM)	1
9	17390	SCRAPER, 85 (SFM)	1
	17351	SCRAPER, 100 (SFM)	
	17350	SCRAPER, 115 (SFM)	
	17349	SCRAPER, 130 (SFM)	
	17217	SCRAPER, 145 (SFM)	
	17218	SCRAPER, 160 (SFM)	
	17219	SCRAPER, 175 (SFM)	
	17220	SCRAPER, 205 (SFM)	
	17221	SCRAPER, 220 (SFM)	
10	17274	HEX BOLT M12X1.75X35(DIN933)(8.8)(ZP)	As per Req.
11	8126	PLAIN WASHER 12MM (BS-4320)	As per Req.
12	1209	NYLOCK NUT M12X1.75 (DIN-982)	As per Req.
13	20272	GREASE NIPPLE M10 X 1.50(STRAIGHT)	2
14	14119	OIL SEAL 72 x 8	2

KIT
(REAR COVER WITH RACKS)

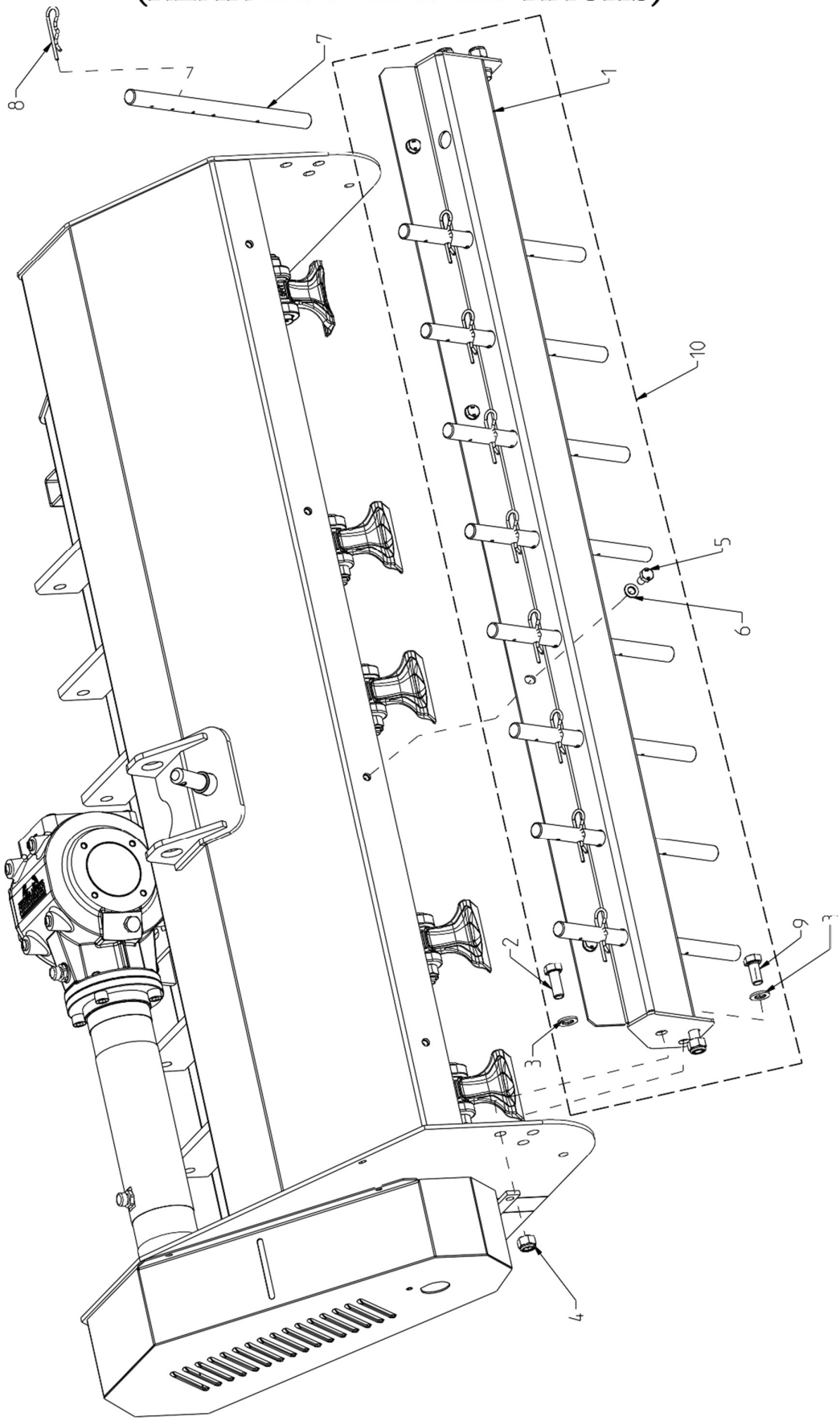

KIT - REAR COVER WITH RACKS			
Sr No.	Part no	Description	Qty.
1	17389	RACKS REAR COVER, WELDMENT, 85 (SFM)	1
	17348	RACKS REAR COVER, WELDMENT, 100 (SFM)	
	17347	RACKS REAR COVER, WELDMENT, 115 (SFM)	
	17346	RACKS REAR COVER, WELDMENT, 130 (SFM)	
	17222	RACKS REAR COVER, WELDMENT, 145 (SFM)	
	17223	RACKS REAR COVER, WELDMENT, 160 (SFM)	
	17224	RACKS REAR COVER, WELDMENT, 175 (SFM)	
	17225	RACKS REAR COVER, WELDMENT, 205 (SFM)	
	17226	RACKS REAR COVER, WELDMENT, 220 (SFM)	
2	3339	HEX BOLT M14X1.50X45(DIN931)(8.8)(ZP)	As per Req.
3	1272	PLAIN WASHER 14MM (BS-4320)	As per Req.
4	1302	NYLOCK NUT M14X1.50 (DIN-982)	As per Req.
5	17276	HEX BOLT M10X1.50X20(DIN933)(8.8)(ZP)	As per Req.
6	8078	PLAIN WASHER 10MM (BS-4320)	As per Req.
7	17227	RACK D22 L350 (SFM-085)	5
		RACK D22 L350 (SFM-100)	6
		RACK D22 L350 (SFM-115)	7
		RACK D22 L350 (SFM-130)	8
		RACK D22 L350 (SFM-145)	9
		RACK D22 L350 (SFM-160)	10
		RACK D22 L350 (SFM-175)	11
		RACK D22 L350 (SFM-205)	13
		RACK D22 L350 (SFM-220)	14
8	15055	R-CLIP WIRE DIA 4.00MM(SFM-085)	As per Req.
9	35033	HEX BOLT M14X1.50X35(DIN933)(8.8)(ZP)	As per Req.
10	17396	REAR COVER WITH RACKS ASS., 85 (SFM)	1
	17377	REAR COVER WITH RACKS ASS., 100 (SFM)	
	17376	REAR COVER WITH RACKS ASS., 115 (SFM)	
	17375	REAR COVER WITH RACKS ASS., 130 (SFM)	
	17304	REAR COVER WITH RACKS ASS., 145 (SFM)	
	17305	REAR COVER WITH RACKS ASS., 160 (SFM)	
	17306	REAR COVER WITH RACKS ASS., 175 (SFM)	
	17307	REAR COVER WITH RACKS ASS., 205 (SFM)	
	17308	REAR COVER WITH RACKS ASS., 220 (SFM)	

NOTES:

NOTES:

Manufactured by:

TirthAgroTechnologyPvt.Ltd.
"SHAKTIMAN", Survey No.-108/1,
Plot No. B,NH-27, Nr. Bharudi Toll Plaza,
Bhunava (Village), Taluka: Gondal,
Dist.: Rajkot – 360311,
State: Gujarat- INDIA,
Phone: + 91(2827) 661637 / 270537
Fax: + 91(2827) 270457
e-mail: info@shaktimanagro.com
www.shaktimanagro.com

Distributed by:

Cosmo Srl
Via Laghi di Avigliana, 117,
12022 Busca CN, Italy
Tel: +39 0171 946654
Fax: +39 0171 946723
e-mail: imcosmo@cosmosrl.com
www.cosmosrl.com