ROTARY

TILLER SERIES

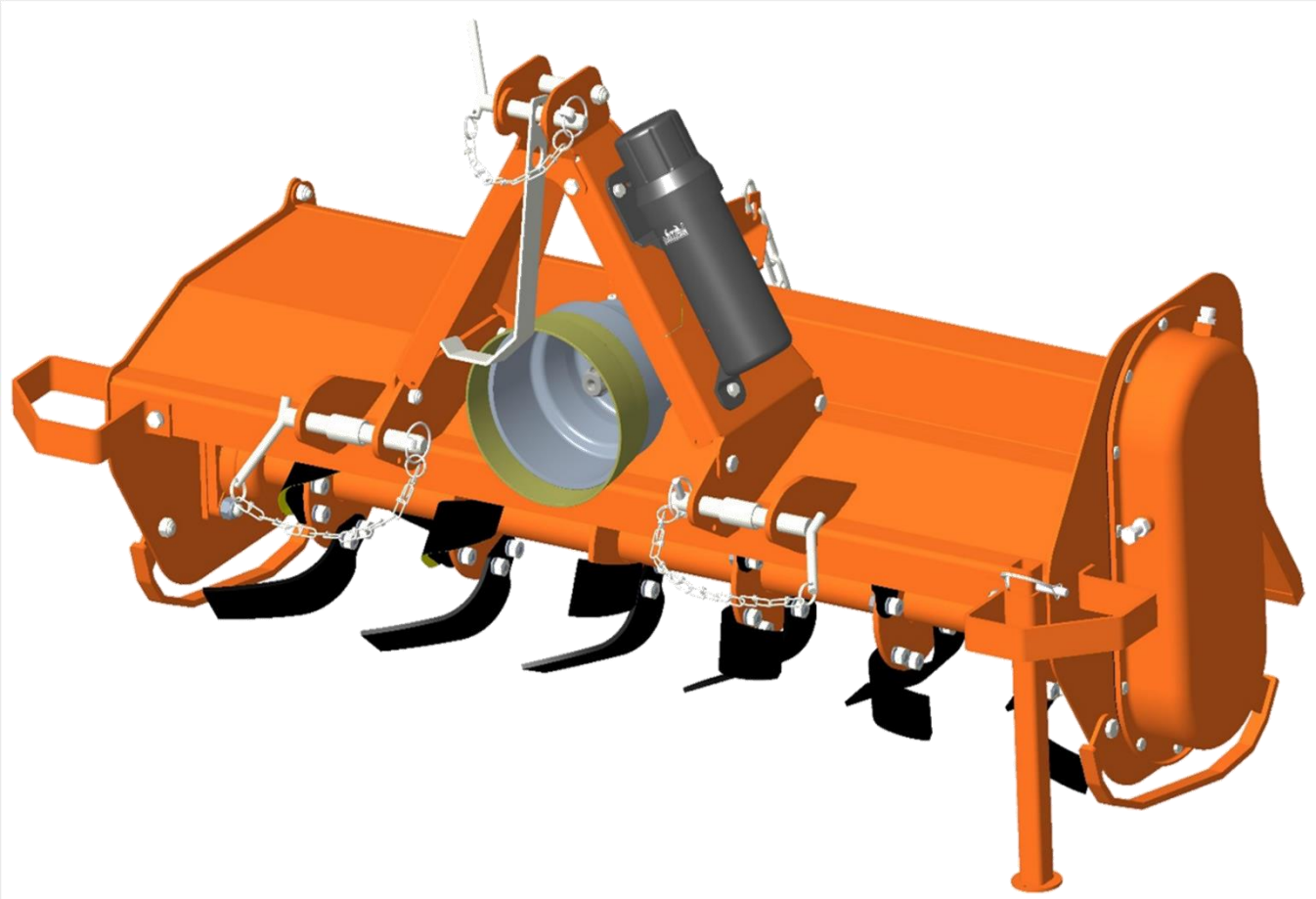

PART'S MANUAL

Tirth Agro Technology Pvt. Ltd.

ISO 9001:2015 CE Certified Company

PM1130-31EN-002_JUN_21

INDEX

Page No.	Description	Revision Date
1.1	ACCESSORIES PARTS	PM1130-31EN-002_REV_000_JUN_21
1.2	ACCESSORIES PARTS	PM1130-31EN-002_REV_000_JUN_21
2.1	MACHINE PARTS (CHAIN DRIVE)	PM1130-31EN-002_REV_000_JUN_21
2.2	MACHINE PARTS (CHAIN DRIVE)	PM1130-31EN-002_REV_000_JUN_21
3.1	GEAR BOX PARTS	PM1130-31EN-002_REV_000_JUN_21
3.2	GEAR BOX PARTS	PM1130-31EN-002_REV_000_JUN_21
4.1	ROTOR PARTS	PM1130-31EN-002_REV_000_JUN_21
4.2	ROTOR PARTS	PM1130-31EN-002_REV_000_JUN_21

ACCESSORIES PARTS

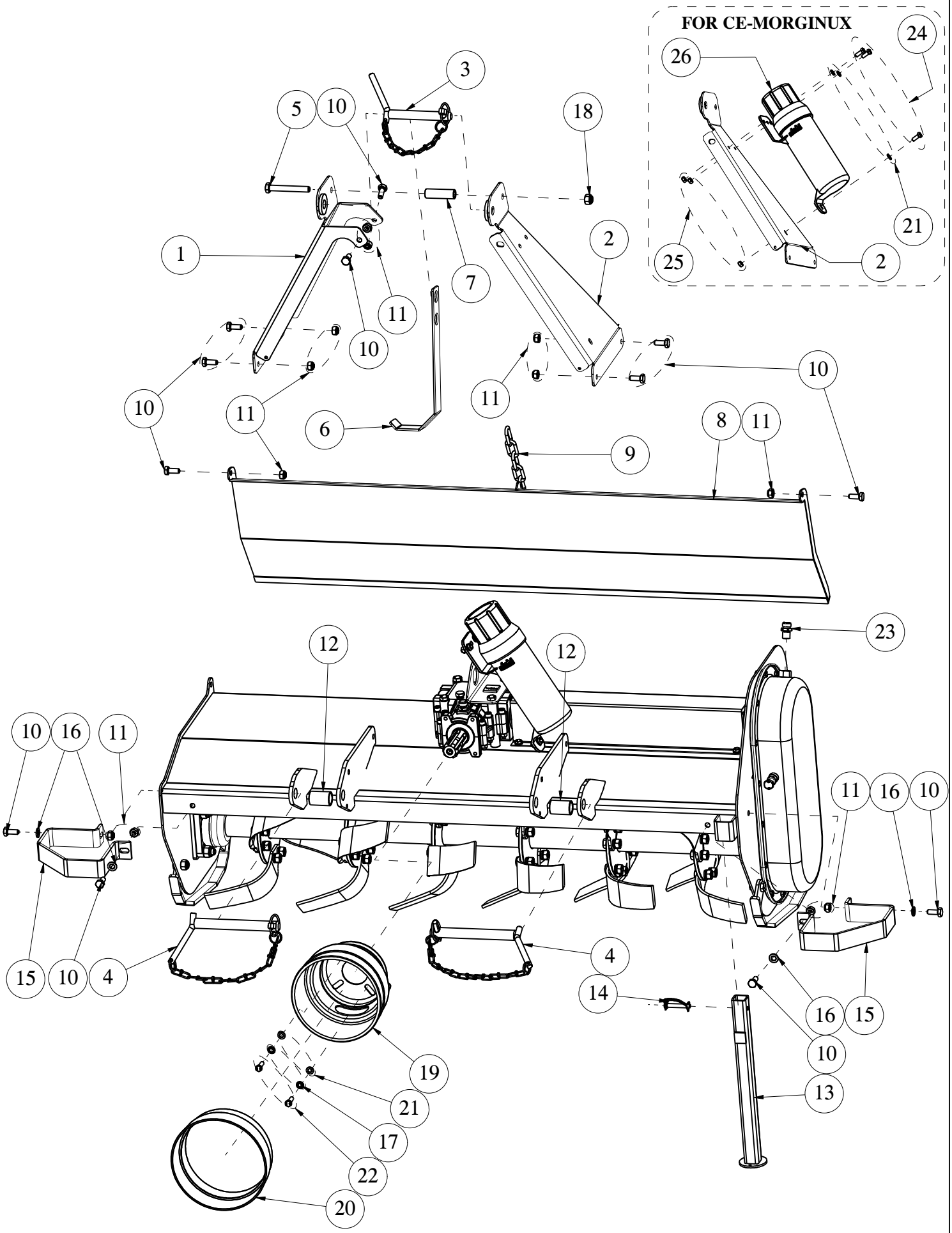

ACCESSORIES PARTS

Sr. No.	Part No.	Description	Qty.
1	36007	LEFT PART OF 3 POINTS HITCH	1
2	36006	RIGHT PART OF 3 POINTS HITCH	1
	36073	RH PART OF 3 POINTS HITCH(3 HOLE)	
3	36029	HITCH PIN Ø19 WITH HANDLE	1
4	36030	HITCH PIN Ø22 WITH HANDLE	2
5	36044	HEX BOLT M12X1.75X90(DIN933)(8.8)(ZP)	1
6	36020	PTO SHAFT BRACKET	1
7	36033	BUSH (DIA. 20 X 13 X 65 L)	1
8	36008	BACK FLAP 125	1
	36056	BACK FLAP 105	
	36060	BACK FLAP 85	
9	36042	LIFITING CHAIN WITH QUICK LINK	1
10	17270	HEX BOLT M10X1.50X25(DIN933)(8.8)(ZP)	12
11	1298	NYLOCK NUT M10X1.50 (DIN-982)	12
12	36032	BUSH (DIA. 30 X 24 X 45 L)	2
13	36052	CRUTCH WELDMENT	1
14	36053	ROUND SNAPPER PIN D8xL51	1
15	36012	FENDER	2
16	8078	PLAIN WASHER 10MM (BS-4320)	4
17	36047	WASHER SCHNNOR M8	2
18	1209	NYLOCK NUT M12X1.75 (DIN-982)	1
19	17788	PTO SHAFT GUARD PLASTIC	1
20	36067	PTO GUARD CONE	1
21	8064	PLAIN WASHER 8MM (BS-4320)	5
22	8171	HEX BOLT M8X1.25X25(IS1364-2)(8.8)(ZP)	2
23	14311	AIR BREATHER 3/8" BSP (1GTSSR210)	1
24	8040	HEX BOLT M8X1.25X20(IS1364-2)(8.8)(ZP)	3
25	8181	HEX NUT M8X1.25(IS 1363)(8)(ZP)	3
26	26030	MANUAL BOX COVER 1/2	1

MACHINE PARTS (CHAIN DRIVE)

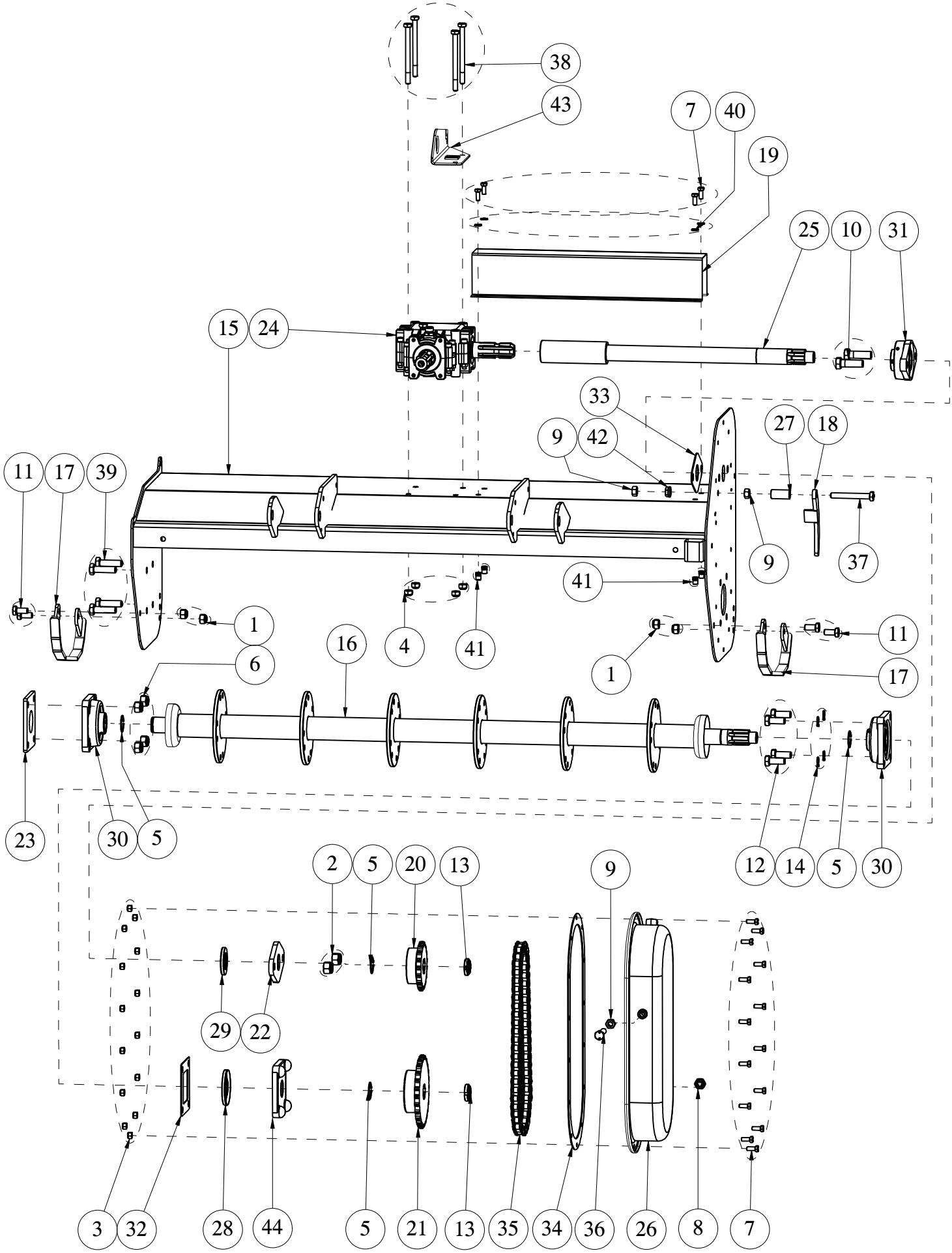

MACHINE PARTS (CHAIN DRIVE)

Sr. No.	Part No.	Description	Qty.
1	1209	NYLOCK NUT M12X1.75 (DIN-982)	4
2	1231	NYLOCK NUT M16X2.0 (DIN-982)	2
3	1297	NYLOCK NUT M8X1.25 (DIN-982)	14
4	1298	NYLOCK NUT M10X1.50 (DIN-982)	4
5	6024	CIRCLIP EXTERNAL 35MM	6
6	1574	NYLOCK NUT M14X2.00 (DIN-982)	4
7	24117	HEX BOLT M8X1.25X20(IS1364-2)(8.8)(ZP)	14
8	14314	OIL LEVEL GAUGE-3/8”BSP (1GTLA21O)	1
9	17273	HEX NUT M12X1.75(DIN 934)(8)(ZP)	3
10	17278	HEX BOLT M16X2.00X50(IS1364-1)(8.8)(ZP)	2
11	17474	HEX BOLT M12X1.75X25(DIN933)(8.8)(ZP)	4
12	17810	HEX BOLT M14X2.00X35(DIN933)(8.8)(ZP)	4
13	33006	GUK SELF LOCKING NUT M25X1.5	2
14	14363	SPRING WASHER M14.00(IS 3063)(ZP)	4
15	36059	FRAME WELDMENT 85	1
	36055	FRAME WELDMENT 105	
	36005	FRAME WELDMENT 125	
16	-	SEE THE ROTOR PARTS PAGE	-
17	36010	DEPTH SKID COMP	2
18	36011	TENSIONER STOP	1
19	36063	DRIVING SHAFT COVER 85	1
	36054	DRIVING SHAFT COVER 105	
	36013	DRIVING SHAFT COVER 125	
20	36014	SPROCKET Z=17	1
21	36015	SPROCKET Z=26	1
22	36016	UCFL SUPPORT PLATE	1
23	36018	UCF SUPPORT PLATE SD SIDE	1
24	-	SEE THE GEAR BOX PARTS PAGE	-
25	36062	DRIVING SHAFT 85	1
	36058	DRIVING SHAFT 105	
	36028	DRIVING SHAFT 125	
26	36001	CHAIN COVER COMP	1
27	36031	TENSIONER RING	1
28	36034	OIL SEAL 35 X 80 X 8	1
29	36035	OIL SEAL 35 X 62 X 7	1
30	36036	SQ FLANGE BEARING UCF 207	2
31	36037	FLANGE BEARING UCFL 207	1
32	36038	GASKET,UCF 207 BEARING	1
33	36039	GASKET,UCFL 207 BEARING	1
34	36040	GASKET,CHAIN COVER	1
35	36041	CHAIN 0.75” PITCH - 52 LINK	1
36	36043	HEX BOLT M12X1.75X60(DIN933)(8.8)(ZP)	1
37	36044	HEX BOLT M12X1.75X90(DIN933)(8.8)(ZP)	1
38	36045	HEX BOLT M10X1.50X130(DIN931)(8.8)(ZP)	4
39	36046	HEX BOLT M14X2.00X50(DIN933)(8.8)(ZP)	4
40	36047	WASHER SCHNNOR M8	4
41	36048	RIVSERT RIVET NUT M8X1.25	4
42	36049	LOCK NUT WITH O RING M12X1.75	1
43	36077	BRACKET	1
44	36081	UCF SUPPORT COVER RD SIDE	1

GEAR BOX PARTS

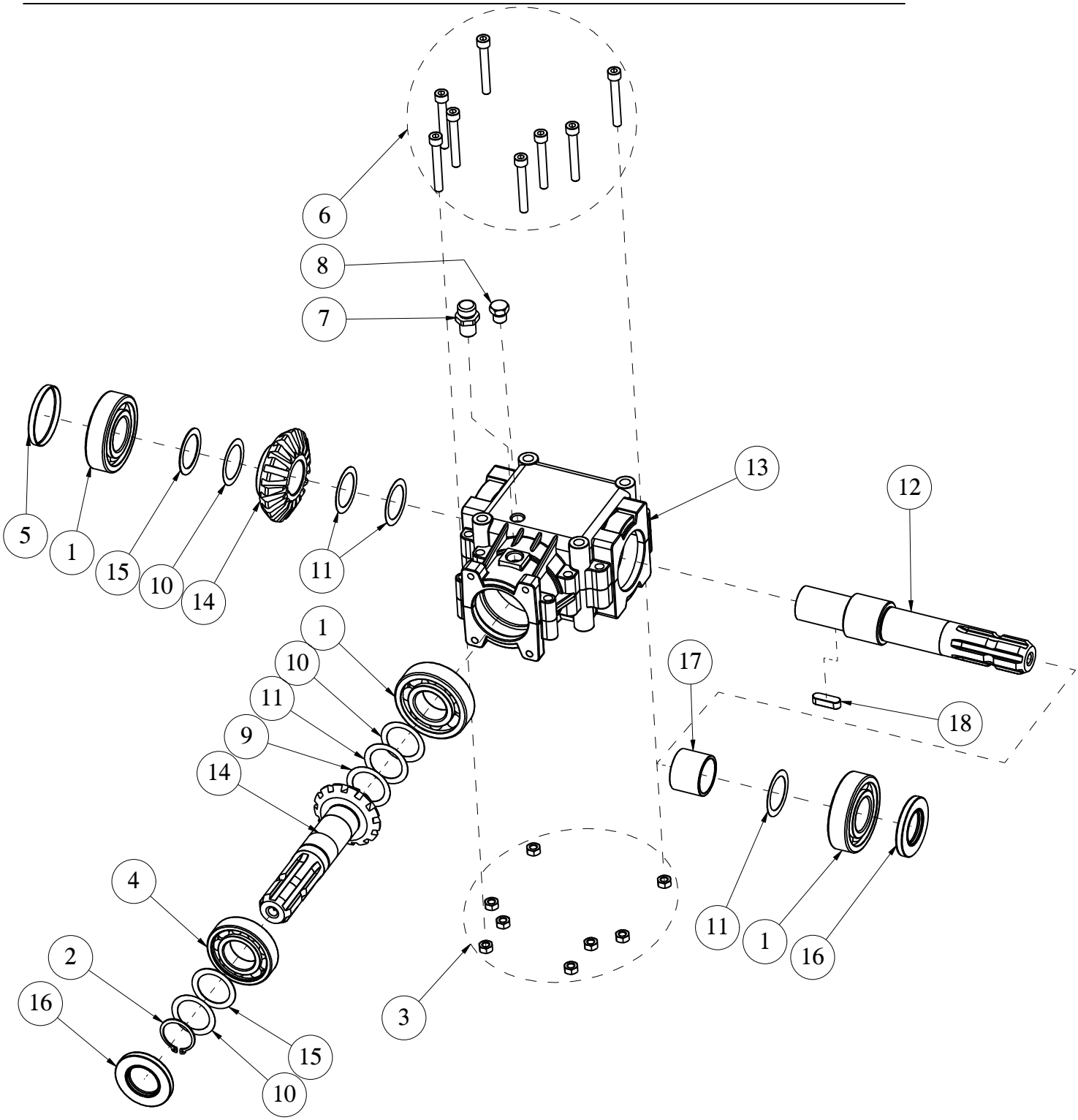

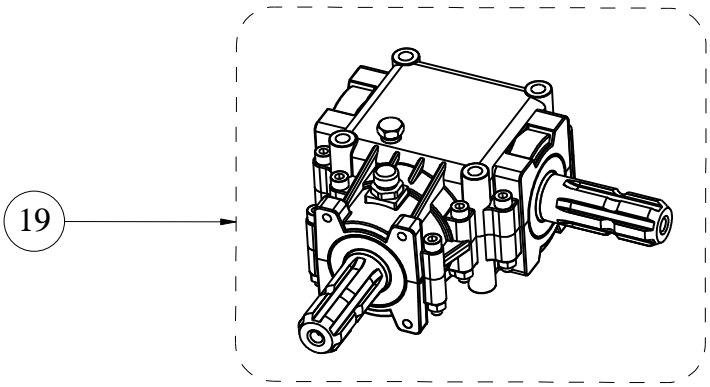

GEAR BOX PARTS

Sr. No.	Part No.	Description	Qty.
1	1131	BEARING 6307	3
2	6024	CIRCLIP EXTERNAL 35MM	1
3	8181	HEX NUT M8X1.25(IS 1363)(8)(ZP)	8
4	10143	BEARING 6207	1
5	14075	OIL SEAL 62 X 7	1
6	18048	ALLEN BOLT M8 X 1.25 X 60	8
7	14311	AIR BREATHER 3/8" BSP (1GTSSR210)	1
8	3323	1/4 BSP BOLT WITH O-RING	1
9	36002	SHIM (DIA 48 X 35.5)(0.10MM)	AS REQ.
10	36003	SHIM (DIA 48 X 35.5)(0.20MM)	AS REQ.
11	36004	SHIM (DIA 48 X 35.5)(0.50MM)	AS REQ.
12	36023	OUTPUT SHAFT	1
13	36075	GEAR BOX HOUSING	1
14	36082	CROWN T19 PINION T13 PAIR	1
15	36026	SHIM (DIA 48 X 35.5)(1.00MM)	AS REQ.
16	36035	OIL SEAL 35 X 62 X 7	2
17	36064	SPACER DIA 42 X 35.5 X 32.5 MM	1
18	36066	PARALLEL KEY 10 X 8 X 30	1
19	36027	GEAR BOX COMP	1

ROTOR PARTS

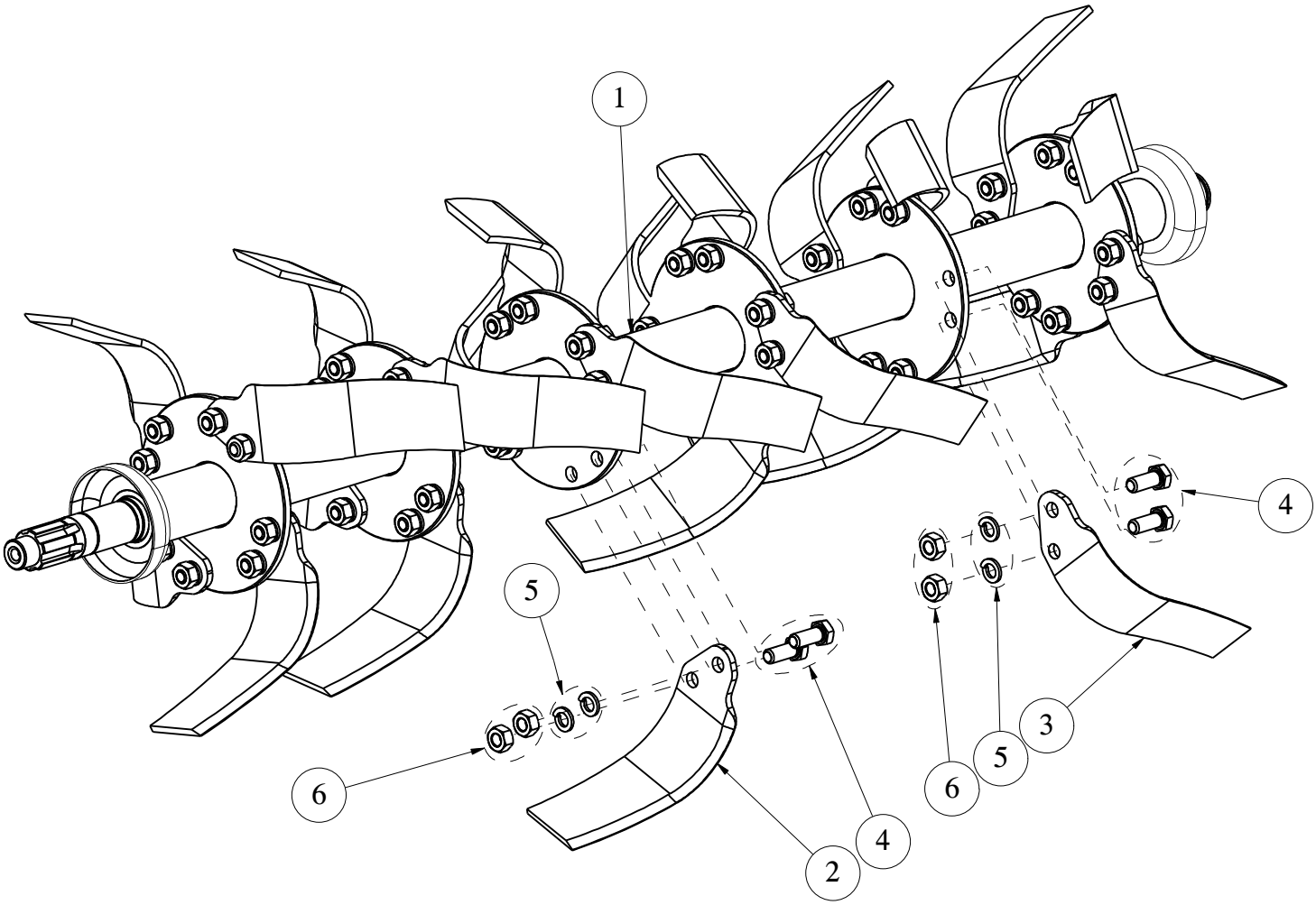

BLADE C-TYPE (60X6)

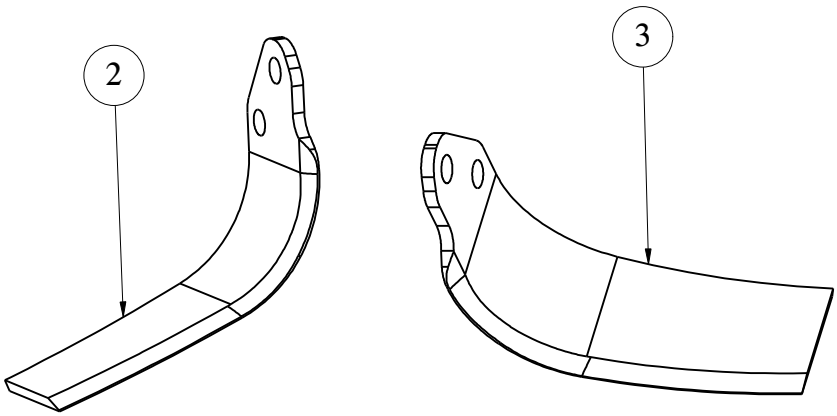

ROTOR PARTS

Sr. No.	Part No.	Description	Qty.
1	36009	ROTOR WELDMENT 125	1
	36057	ROTOR WELDMENT 105	
	36061	ROTOR WELDMENT 85	
2	36050	BLADE C-TYPE LH (60X6) W/O L	AS REQ.
3	36051	BLADE C-TYPE RH (60X6) W/O L	AS REQ.
4	17275	HEX BOLT M12X1.75X30(DIN933)(8.8)(ZP)	AS REQ.
5	14362	SPRING WASHER M12.00(IS 3063)(ZP)	AS REQ.
6	17273	HEX NUT M12X1.75(DIN 934)(8)(ZP)	AS REQ.

NOTES:

TirthAgroTechnologyPvt.Ltd.

"**SHAKTIMAN**", Survey No.-108/1,

Plot No. B,NH-27, Nr. Bharudi Toll Plaza,

Bhunava (Village), Taluka: Gondal,

Dist.: Rajkot – 360311,

State: Gujarat- INDIA

Distributed by:
FARM IMPLEMENTS Pty Ltd
12 Tarmac Way
Pakenham Victoria AUSTRALIA 3810 AUST:
+61 3 9706 5166
NZ: +64 9 237 1500
info@cosmobully.com
www.cosmobully.com